RoHS

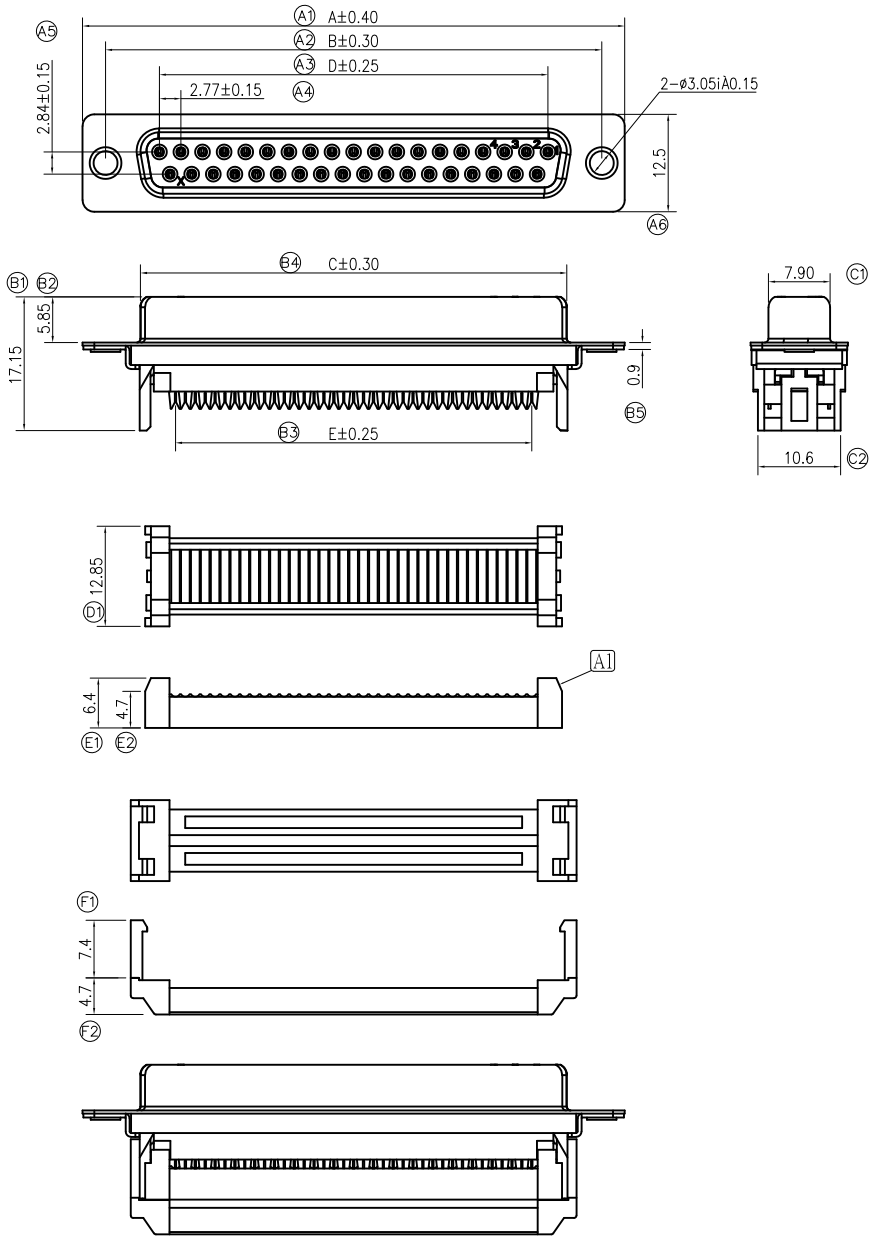

MATERIAL&FINISH

Insulator: PBT Glass Fiber(UL94V-0)

Contact Material: Terminal Brass.
Shell Spcc.
Rivet Copper Alloy.

Contact Plating : Terminal Gold-Plated Over Nickel.
Shell Nickel OR TIN.
Rivet Nickel.

SPECIFICATIONS

Current Rating :1A AC,DC

Voltage Rating : 250V AC,DC

Temperature Range:-40°C To+105°C

Contact Resistance:20mΩ Max

Insulation Resistance:1000MΩ Min

Withstanding Voltage:500V AC/Min

3110-XXAFXXXXXX R10

PIN数						1:盘装 R:RoHS
3:附(盖+反扣)	A:扣盖 附反扣					
F:母	M:公				1:锡壳 2:镍壳	3:镍壳(48H) A:前镍后锡
A:PBT防火	E:PA66防火				1:G/F 2:G/1u" 3:G/3u" 4:G/5u"	5:G/15u" 6:G/30u"
1:黑色	2:蓝色					
B:青铜	P:磷铜				N:镍	G:全金

NUMBER OF POSITIONS	DIMENSION				
	A	B	C	D	E
09	30.80	25.00	16.35	11.08	10.16
15	39.14	33.30	24.75	19.39	17.78
25	53.05	47.04	38.35	33.24	30.48
37	69.32	63.50	54.75	49.86	45.72

MARK	DESCRIPTION	DATE	REVISED	APPROVED
ΔX				
ΔX				
ΔX				

REVISIONS

UNSPECIFIED TOLERANCES	
ANGLAR	±5°
L≤ 4	±0.2
4<L≤ 16	±0.3
16<L≤ 63	±0.4
L> 63	±0.5

www.hiemi.cn

HIEMI TECHNOLOGY CO., LTD

DSND		SCALE: N/A	3110 SERIES D-SUB-XXF(3)-外扣压排式(短胶)
DWN		VIEW:	PART NO.: 3110-01-02
CHKD		UNIT: mm/in	DWG NO.:
APPD		SIZE: A4	

WEIGHT	SHEET	REVISION
	1/1	A0