RoHS

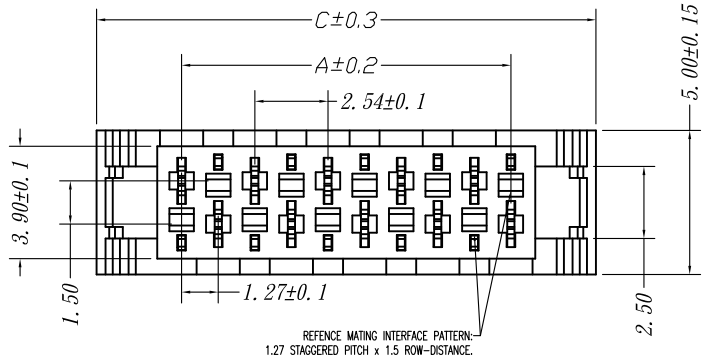

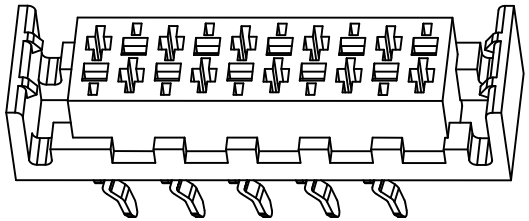

■ Specifications(规格)：

- Voltage rating(额定电压)：500V AC / DC
- Current rating(额定电流)：1A AC / DC
- Withstanding voltage(耐压值)：1000V AC/minute
- Temperature range(工作温度)：-40°C~+105°C
- Insulation resistance(绝缘电阻)：≥1000MΩ
- Contact resistance(接触电阻)：≤20mΩ
- After environmental testing(环境测试后)：≤30mΩ

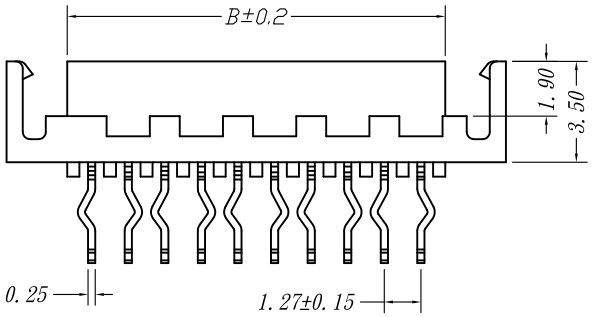

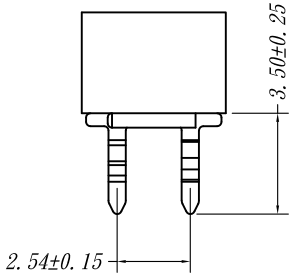

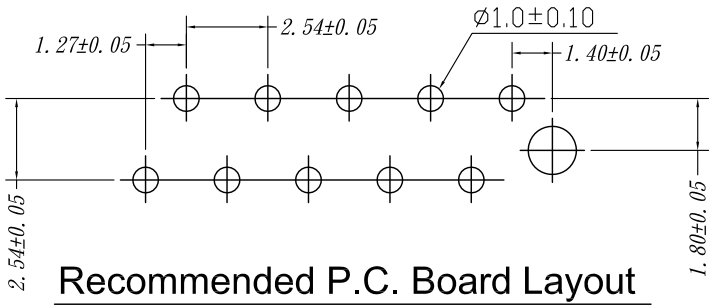

Recommended P.C. Board Layout

PARTNUMBER REEL PACKAGING	NUMBER OF POSITIONS	DIMENSION			Q'ty /Tube
		A	B	C	
338068-4	04	3.81	5.50	9.71	59
338068-6	06	6.35	8.04	12.25	47
338068-8	08	8.89	10.58	14.79	39
1-338068-0	10	11.43	13.12	17.33	33
1-338068-2	12	13.97	15.66	19.87	29
1-338068-4	14	16.51	18.20	22.41	25
1-338068-6	16	19.05	20.74	24.95	23
1-338068-8	18	21.59	23.28	27.49	21
2-338068-0	20	24.13	25.82	30.03	19
2-338068-2	22	26.67	28.36	32.57	17
2-338068-4	24	29.21	30.90	35.11	16
2-338068-6	26	31.75	33.44	37.65	15

MARK	DESCRIPTION	DATE	REVISED	APPROVED
ΔX				
ΔX				
ΔX				

REVISIONS

UNSPECIFIED TOLERANCES	
ANGLAR	±5°
L≤ 4	±0.2
4<L≤ 16	±0.3
16<L≤ 63	±0.4
L> 63	±0.5

www.hiemi.cn

DSND		SCALE: N/A	1.27*1.5MM DIP 180度 母头 (有耳/有台/双缺)
DWN		VIEW:	PART NO.:
CHKD		UNIT: mm/in	DWG NO.:
APPD		SIZE: A4	

HIEMI TECHNOLOGY CO., LTD

WEIGHT	SHEET	REVISION
	1/1	A0