RoHS

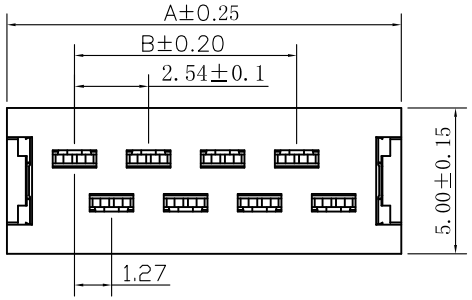

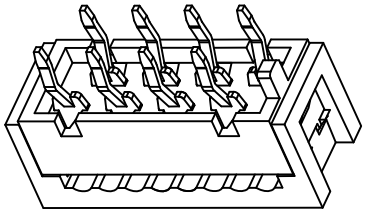

MATERIAL&FINISH
Insulator: PBT Glass Fiber(UL94V-0)
Contact : Phosphor bronze
Contact : Sn Over Ni.

ELECTRICAL CHARACTERISTICS:
Current Rating: 1 Amp
Contact Resistance: 20mΩ Max
Withstanding Voltage: 500V AC/Min
Insulation Resistance: 1000MΩ Min
Temperature Range: -20° C To+105° C

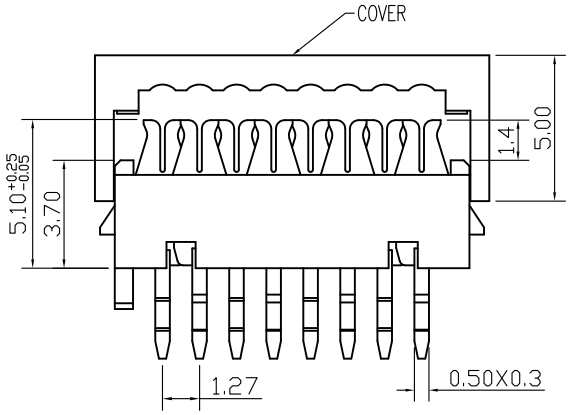

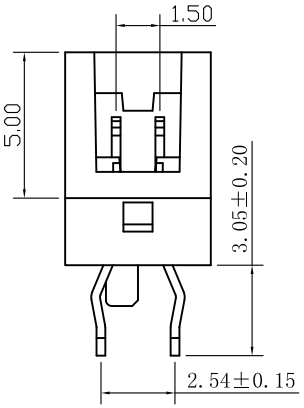

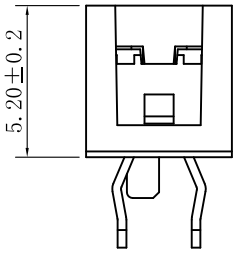

2310-XXX2A3PSS0 XX0

PIN数
1:不扣盖 2:扣 盖
2:有槽
A:PBT防火
3:大红 4:紫红
B:青铜 P:磷铜
1:盘装
2:管装
3:袋装
R:RoHS
S:SONY
H:Halogen Free
0:NONE
S:全亮锡
S:亮锡

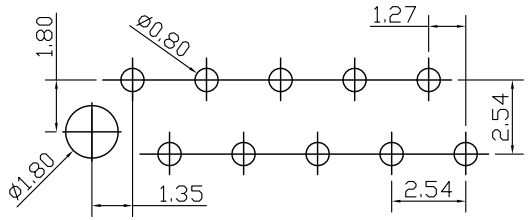

Recommended P.C. Board Layout

NUMBER OF POSITIONS	DIM. A	DIM. B	Q'ty /Tube	NUMBER OF POSITIONS	DIM. A	DIM. B	Q'ty /Tube	NUMBER OF POSITIONS	DIM. A	DIM. B	Q'ty /Tube
04	8.45	2.54	68	12	18.61	12.7	31	20	28.77	22.86	20
06	10.99	5.08	52	14	21.15	15.24	27	22	31.31	25.40	18
08	13.53	7.62	42	16	23.69	17.78	24	24	33.85	27.94	17
10	16.07	10.16	36	18	26.23	20.32	22	26	36.39	30.48	16

MARK	DESCRIPTION	DATE	REVISED	APPROVED
ΔX				
ΔX				
ΔX				

REVISIONS

UNSPECIFIED TOLERANCES	
ANGLAR	±5°
L≤ 4	±0.2
4<L≤ 16	±0.3
16<L≤ 63	±0.4
L> 63	±0.5

www.hiemi.cn

HIEMI TECHNOLOGY CO., LTD

DSND		SCALE: N/A	2310SERIES 1.27*1.5DIP-XXH(2)(有槽)
DWN		VIEW:	PART NO.: 2310-01
CHKD		UNIT: mm/in	DWG NO.:
APPD		SIZE: A4	

WEIGHT	SHEET	REVISION
	1/1	A0