RoHS

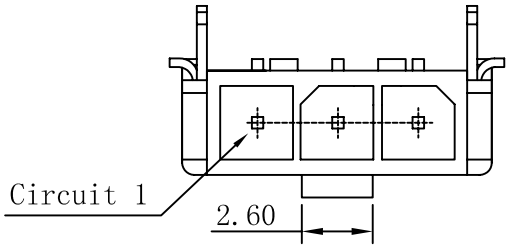

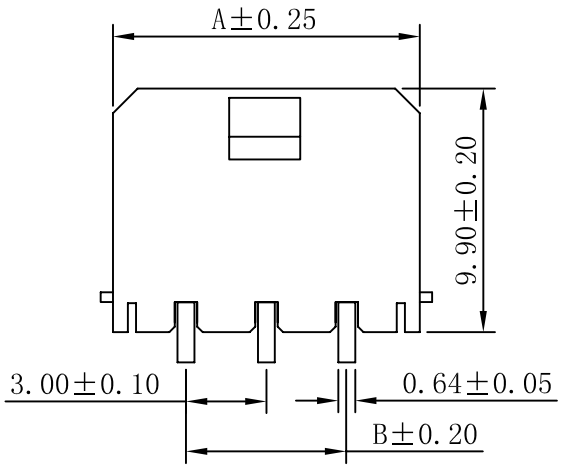

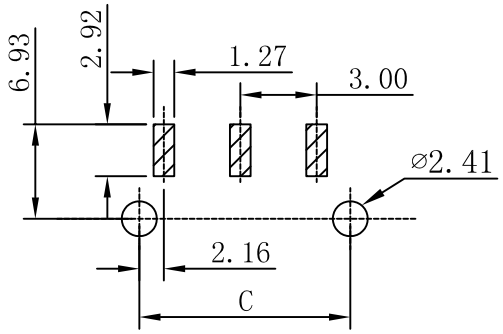

P.C.B. LAYOUT

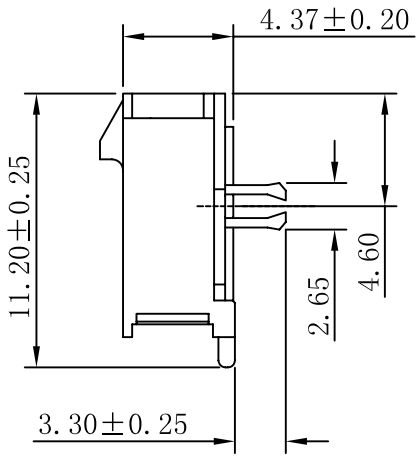

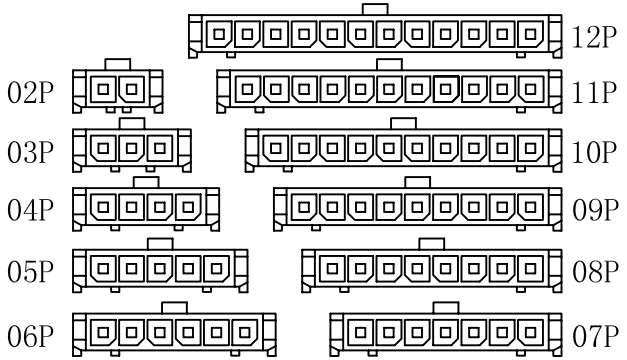

CIRCUIT SIZE LAYOUT

■ SPECIFICATIONS

- Voltage rating: 250V AC, DC
- Current rating: 5A, AC, DC
- Withstanding Voltage: 1500V AC/minute
- Insulation resistance:1000MΩ min
- Temperature range: -25° C~+85° C
- Contact resistance: 20mΩ max

■ WAFER

- Part No.: W3045SRD-NP
- Poles : 02-12P
- Housing Material: LCP UL94V-0 Black
- Ter Material: Brass
- Solder Tabs Material: Brass
- Contact Area Plating: Tin-Plated
- The Dimension Marked "▼" Must Be Recorded

Part No	Dimensions(mm)		
	A	B	C
02	9.65	3.00	7.30
03	12.65	6.00	10.30
04	15.65	9.00	13.30
05	18.65	12.00	16.30
06	21.65	15.00	19.30
07	24.65	18.00	22.30
08	27.65	21.00	25.30
09	30.65	24.00	28.30
10	33.65	27.00	31.30
11	36.65	30.00	34.30
12	39.65	33.00	37.30

MARK	DESCRIPTION	DATE	REVISED	APPROVED
ΔX				
ΔX				
ΔX				

REVISIONS

ANGLAR	±5°
L≤ 4	±0.2
4<L≤ 16	±0.3
16<L≤ 63	±0.4
L> 63	±0.5

UNSPECIFIED TOLERANCES

www.hiemi.cn

HIEMI TECHNOLOGY CO., LTD

DSND		SCALE: N/A
DWN		VIEW:
CHKD		UNIT: mm/in
APPD		SIZE: A4

MX3.0mm SMT 90°鱼叉式 Wafer Connector Series

PART NO.: W3045SRD-NP

DWG NO.:

WEIGHT	SHEET	REVISION
	1/1	A0