RoHS

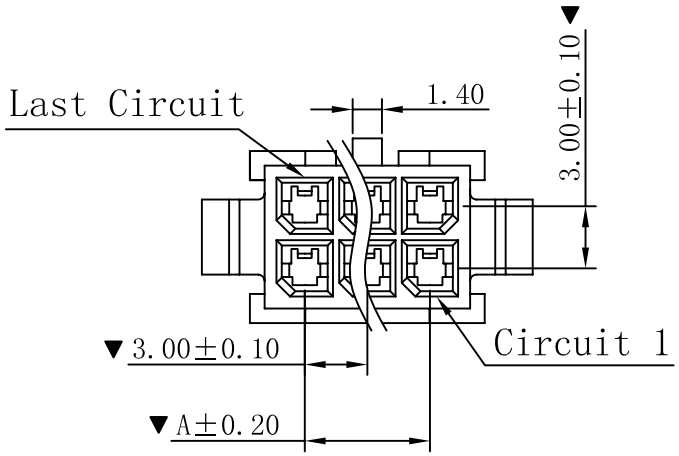

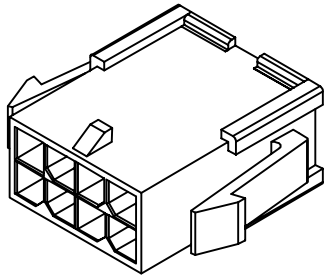

■ SPECIFICATIONS

- Voltage rating: 250V AC, DC
- Current rating: 5A, AC, DC
- Withstanding Voltage: 1500V AC/minute
- Insulation resistance:1000MΩ min
- Temperature range: -25° C~+85° C
- Contact resistance: 20mΩ max

■ HOUSING

- Part No.: H3020-2xNP
- Poles : 02-24P
- Housing Material:Nylon66 UL94V-2 Black
- The Dimension Marked "▼" Must Be Recorded

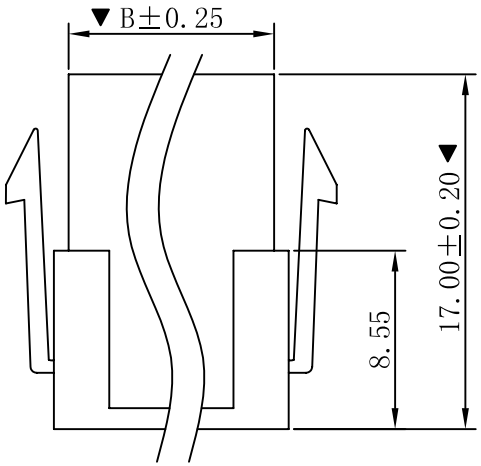

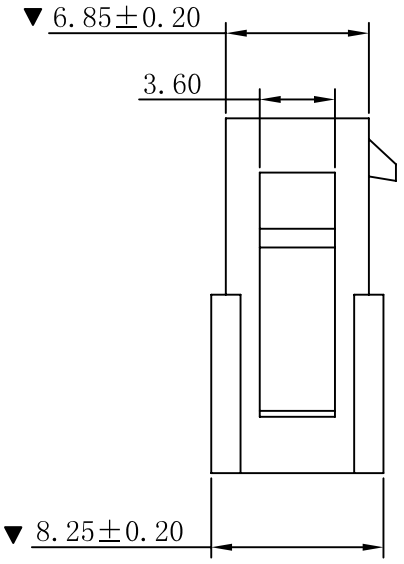

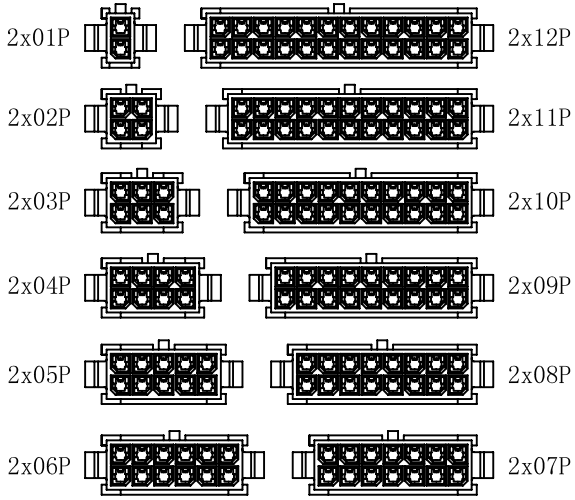

CIRCUIT SIZE LAYOUT

Part No	Dimensions(mm)	
	A	B
02	---	3.85
04	3.00	6.85
06	6.00	9.85
08	9.00	12.85
10	12.00	15.85
12	15.00	18.85
14	18.00	21.85
16	21.00	24.85
18	24.00	27.85
20	27.00	30.85
22	30.00	33.85
24	33.00	36.85

MARK	DESCRIPTION	DATE	REVISED	APPROVED
ΔX				
ΔX				
ΔX				

REVISIONS

ANGLAR	±5°
L≤ 4	±0.2
4<L≤ 16	±0.3
16<L≤ 63	±0.4
L> 63	±0.5

UNSPECIFIED TOLERANCES

www.hiemi.cn

HIEMI TECHNOLOGY CO., LTD

DSND		SCALE: N/A
DWN		VIEW:
CHKD		UNIT: mm/in
APPD		SIZE: A4

MX3.00mm Female Housing Connector Series

PART NO.: H3020-2xNP

DWG NO.:

WEIGHT	SHEET	REVISION
	1/1	A0