RoHS

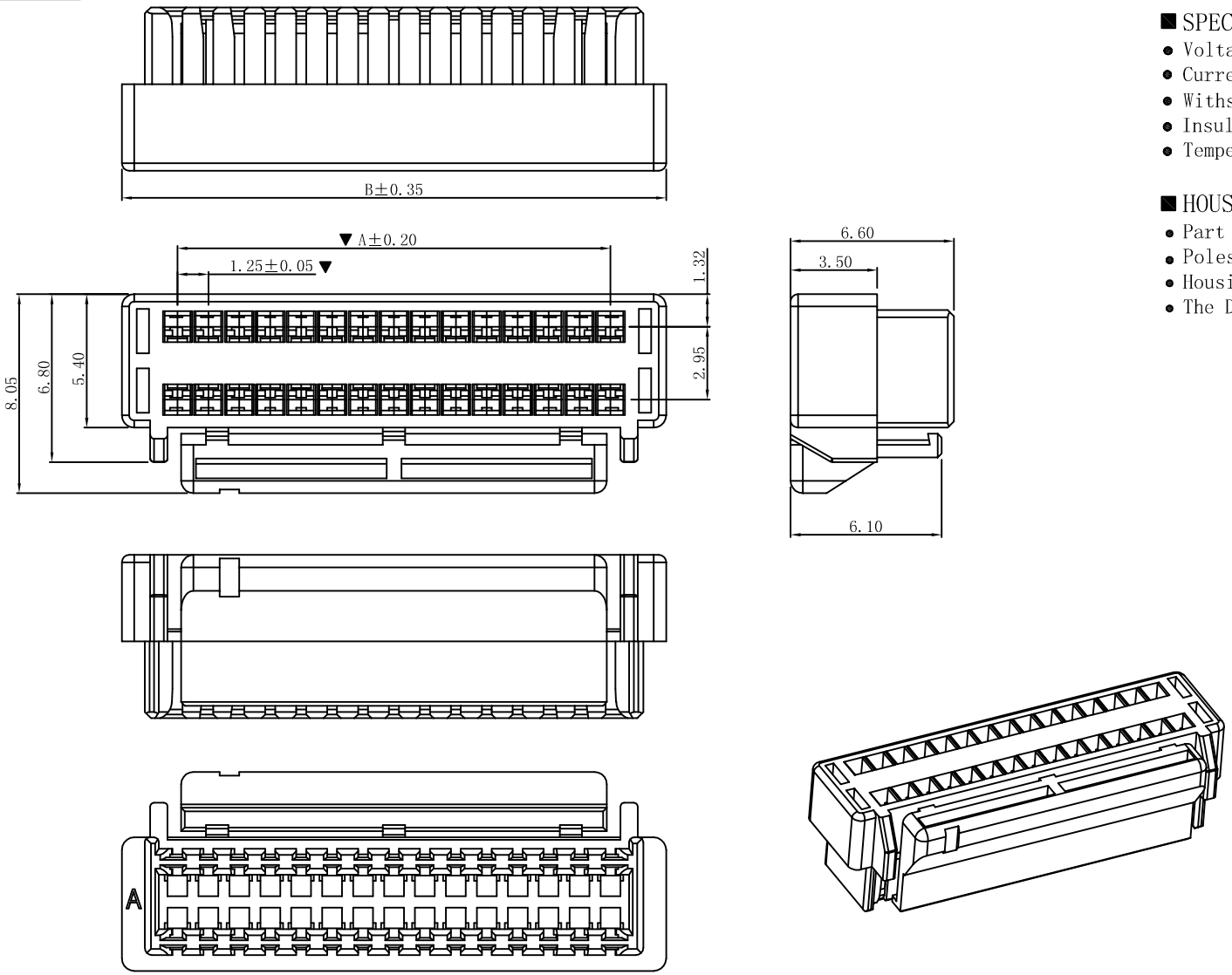

■ SPECIFICATIONS

- Voltage rating: 50V AC, DC
- Current rating: 1A, AC, DC
- Withstanding Voltage: 500V AC/minute
- Insulation resistance:100MΩ min
- Temperature range: -25° C~+85° C

■ HOUSING

- Part No.: H1258-2xNP
- Poles: 10-40P
- Housing Material: PA66 UL94V-0
- The Dimension Marked "▼" Must Be Recorded

PART NO.	Dimension mm	
	A	B
2x5P	5.00	9.50
2x6P	6.25	10.75
2x7P	7.50	12.00
2x8P	8.75	13.25
2x9P	10.00	14.50
2x10P	11.25	15.75
2x11P	12.50	17.00
2x12P	13.75	18.25
2x13P	15.00	19.50
2x14P	16.25	20.75
2x15P	17.50	22.00
2x16P	18.75	23.25
2x17P	20.00	24.50
2x18P	21.25	25.75
2x19P	22.50	27.00
2x20P	23.75	28.25

MARK	DESCRIPTION	DATE	REVISED	APPROVED
ΔX				
ΔX				
ΔX				

REVISIONS

ANGLAR	±5°
L≤ 4	±0.2
4<L≤ 16	±0.3
16<L≤ 63	±0.4
L> 63	±0.5

UNSPECIFIED TOLERANCES

www.hiemi.cn

HIEMI TECHNOLOGY CO., LTD

DSND		SCALE: N/A
DWN		VIEW:
CHKD		UNIT: mm/in
APPD		SIZE: A4

GHD1.25mm Male Housing Connector Series

PART NO.: H1258-2xNP

DWG NO.:

WEIGHT	SHEET	REVISION
	1/1	A0

RoHS

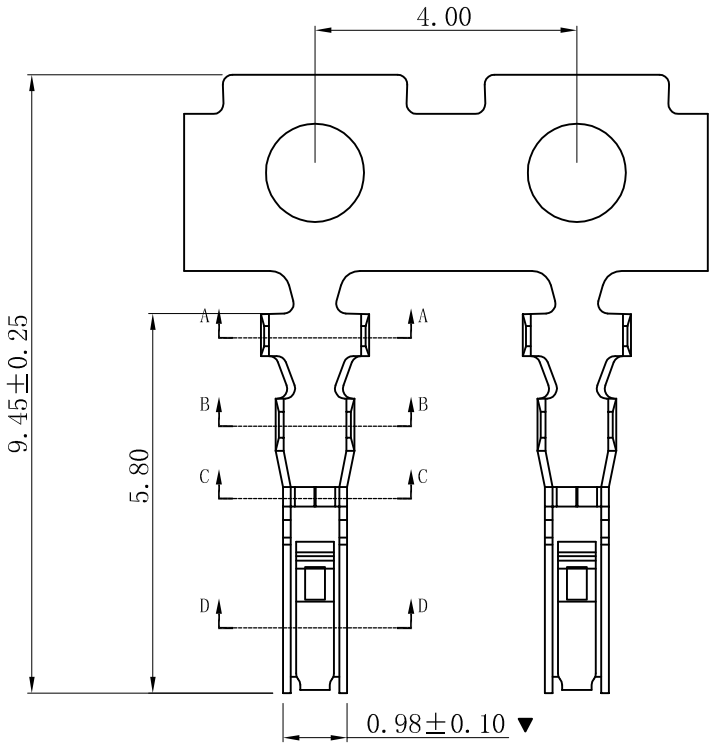

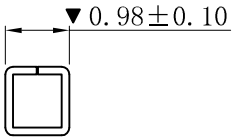

SECTION: C-C

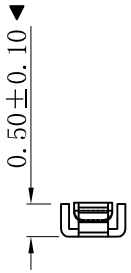

SECTION: D-D

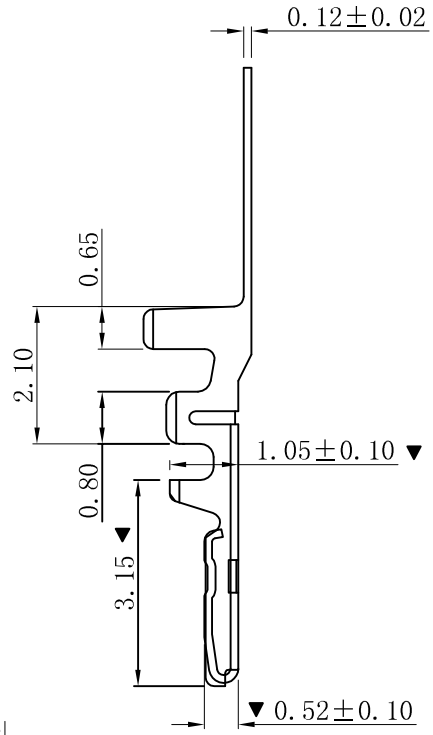

■ SPECIFICATIONS

- Voltage rating: 50V AC, DC
- Current rating: 1A, AC, DC
- Withstanding Voltage: 500V AC/minute
- Temperature range: -25° C~+85° C
- Contact resistance: 50mΩ max

■ TERMINAL

- Part No.: T1258PT
- Applicable wire: AWG#26-#32
- Material: Phosphor Bronze
- Finish: Tin plated or Gold-flash
- The Dimension Marked "▼" Must Be Recorded

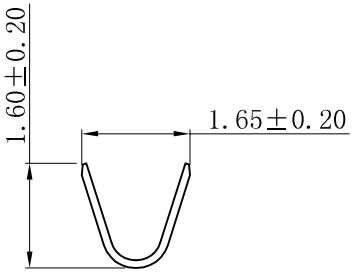

SECTION: A-A

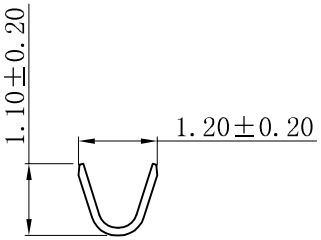

SECTION: B-B

					ANGLAR	±5°
ΔX					L≤ 4	±0.2
ΔX					4<L≤ 16	±0.3
ΔX					16<L≤ 63	±0.4
MARK	DESCRIPTION	DATE	REVISED	APPROVED	L> 63	±0.5
REVISIONS					UNSPECIFIED TOLERANCES	

www.hiemi.cn

HIEMI TECHNOLOGY CO., LTD

DSND		SCALE: N/A	GHD1.25mm Female Terminal Connector Series
DWN		VIEW:	PART NO.: T1258PT
CHKD		UNIT: mm/in	DWG NO.:
APPD		SIZE: A4	

WEIGHT	SHEET	REVISION
	1/1	A0