■ SPECIFICATIONS

- Voltage rating: 250V AC, DC
- Current rating: 7A, AC, DC
- Withstanding Voltage: 1500V AC/minute
- Insulation resistance:1000MΩ min
- Temperature range: -25° C~+85° C
- Contact resistance: 20mΩ max

■ TERMINAL

- Part No.: T3961PT(L)
- Applicable wire: AWG#16-#22
- Material: Phosphor Bronze
- Finish: Tin Plated
- The Dimension Marked "▼" Must Be Recorded

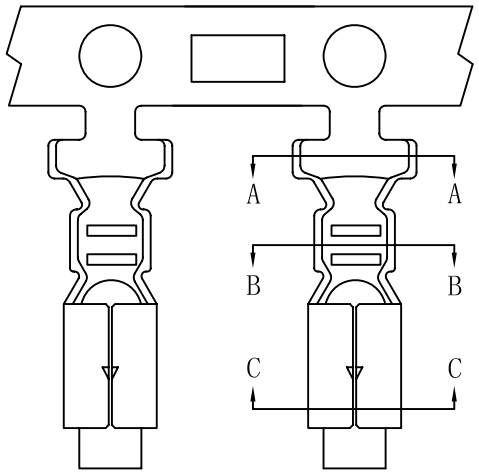

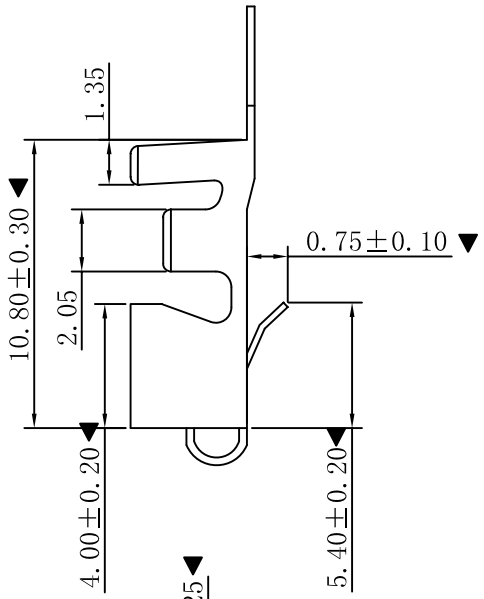

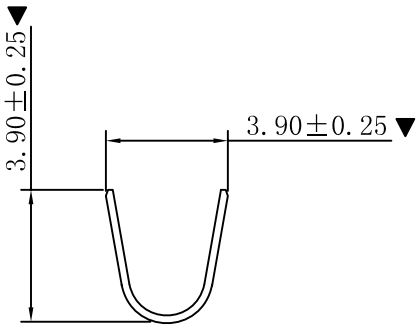

SEC A-A

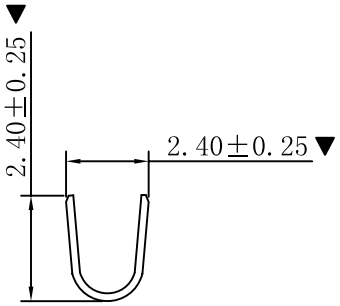

SEC B-B

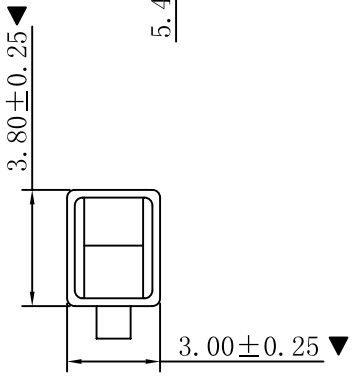

SEC C-C

MARK	DESCRIPTION	DATE	REVISED	APPROVED
ΔX				
ΔX				
ΔX				

REVISIONS

ANGLAR	±5°
L≤ 4	±0.2
4<L≤ 16	±0.3
16<L≤ 63	±0.4
L> 63	±0.5

UNSPECIFIED TOLERANCES

www.hiemi.cn

DSND		SCALE: N/A	MODEL TYPE: VH3.96mm Terminal Connector Series
DWN		VIEW:	PART NO.: T3961PT(L)
CHKD		UNIT: mm/in	DWG NO.:
APPD		SIZE: A4	

HIEMI TECHNOLOGY CO., LTD

WEIGHT	SHEET	REVISION
	1/1	A0

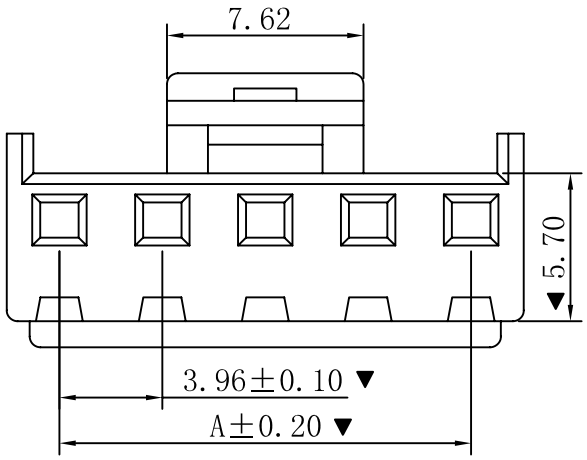

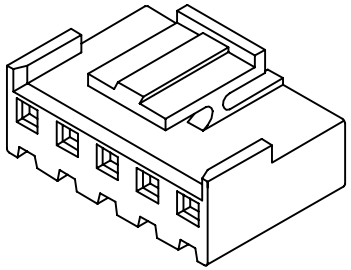

■SPECIFICATIONS

- Voltage rating: 250V AC, DC
- Current rating: 7A, AC, DC
- Withstanding Voltage: 1500V AC/minute
- Insulation resistance:1000MΩ min
- Temperature range: -25° C~+85° C
- Contact resistance: 20mΩ max

■HOUSING

- Part No.: H3961-NP(L)
- Poles : 02-16P
- Housing Material: Nylon66 UL94V-0
- The Dimension Marked "▼" Must Be Recorded

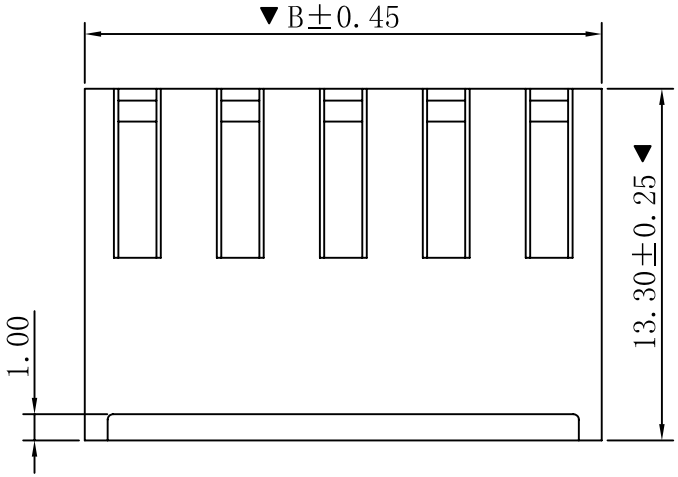

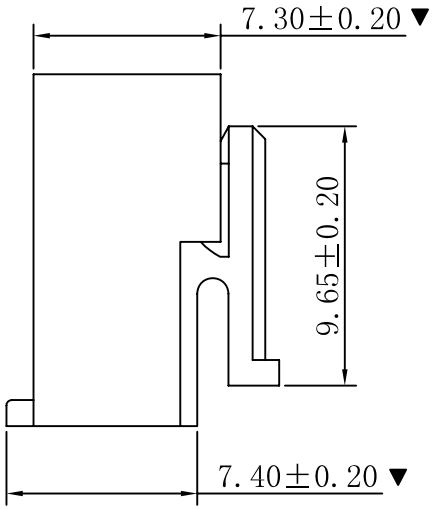

PART NO.	Dimensions (mm)	
	A	B
02	3.96	7.92
03	7.92	11.88
04	11.88	15.84
05	15.84	19.80
06	19.80	23.76
07	23.76	27.72
08	27.72	31.68
09	31.68	35.64
10	35.64	39.60
11	39.60	43.56
12	43.56	47.52
13	47.52	51.48
14	51.48	55.44
15	55.44	59.40
16	59.40	63.36

MARK	DESCRIPTION	DATE	REVISED	APPROVED
ΔX				
ΔX				
ΔX				

REVISIONS

UNSPECIFIED TOLERANCES	
ANGLAR	±5°
L≤ 4	±0.2
4<L≤ 16	±0.3
16<L≤ 63	±0.4
L> 63	±0.5

www.hiemi.cn

DSND		SCALE: N/A
DWN		VIEW:
CHKD		UNIT: mm/in
APPD		SIZE: A4

HIEMI TECHNOLOGY CO., LTD

MODEL TYPE: VH3.96mm Terminal Connector Series

PART NO.: H3961-NP(L)

DWG NO.:

WEIGHT	SHEET	REVISION
	1/1	A0

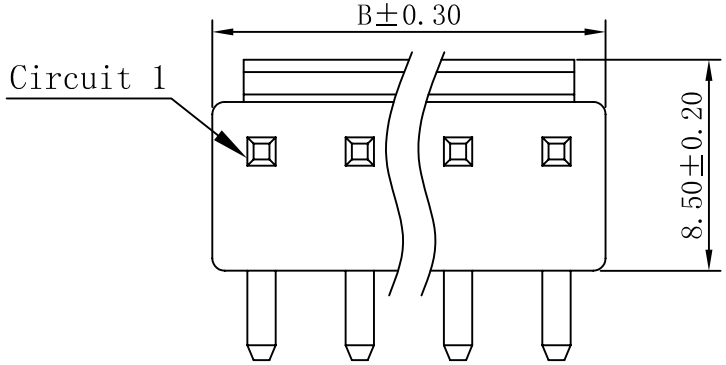

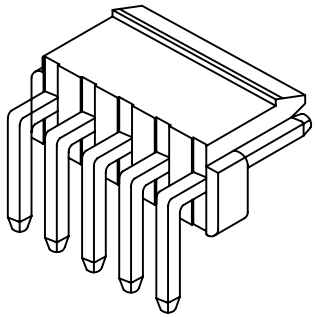

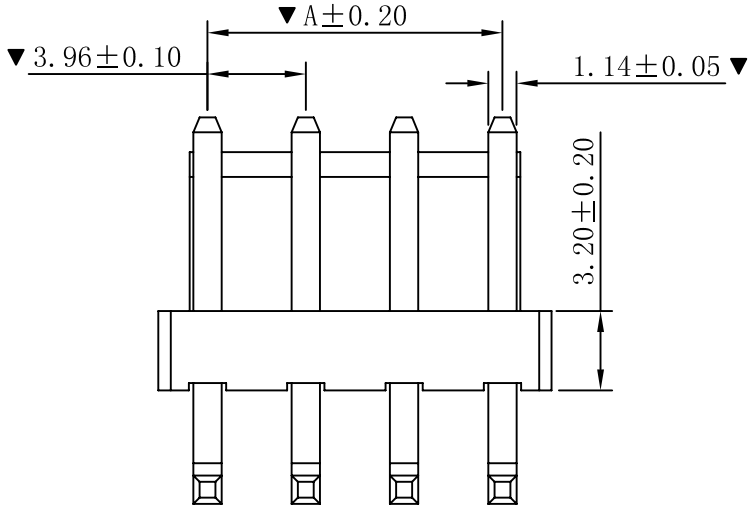

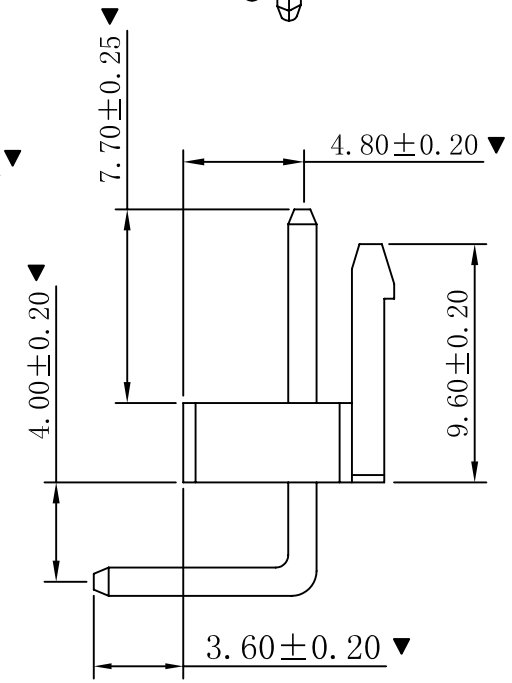

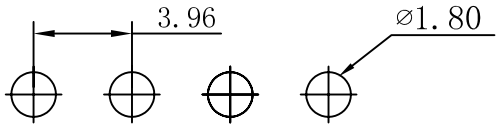

P.C.B. LAYOUT

■ SPECIFICATIONS

- Voltage rating: 250V AC, DC
- Current rating: 7A, AC, DC
- Withstanding Voltage: 1500V AC/minute
- Insulation resistance:1000MΩ min
- Temperature range: -25° C~+85° C
- Contact resistance: 20mΩ max

■ WAFER

- Part No.: W3961R-NP
- Poles : 02-16P
- Housing Material: Nylon66 UL94V-0
- Pin Material: Brass
- Contact Area Plating: Tin-Plated
- The Dimension Marked "▼" Must Be Recorded

PART NO.	Dimensions (mm)	
	A	B
02	3.96	7.92
03	7.92	11.88
04	11.88	15.84
05	15.84	19.80
06	19.80	23.76
07	23.76	27.72
08	27.72	31.68
09	31.68	35.64
10	35.64	39.60
11	39.60	43.56
12	43.56	47.52
13	47.52	51.48
14	51.48	55.44
15	55.44	59.40
16	59.40	63.36

MARK	DESCRIPTION	DATE	REVISED	APPROVED
ΔX				
ΔX				
ΔX				

REVISIONS

UNSPECIFIED TOLERANCES	
ANGLAR	±5°
L≤ 4	±0.2
4<L≤ 16	±0.3
16<L≤ 63	±0.4
L> 63	±0.5

www.hiemi.cn

HIEMI TECHNOLOGY CO., LTD

DSND		SCALE: N/A	MODEL TYPE: VH3.96mm Terminal Connector Series
DWN		VIEW:	PART NO.: W3961R-NP
CHKD		UNIT: mm/in	DWG NO.:
APPD		SIZE: A4	

WEIGHT	SHEET	REVISION
	1/1	A0

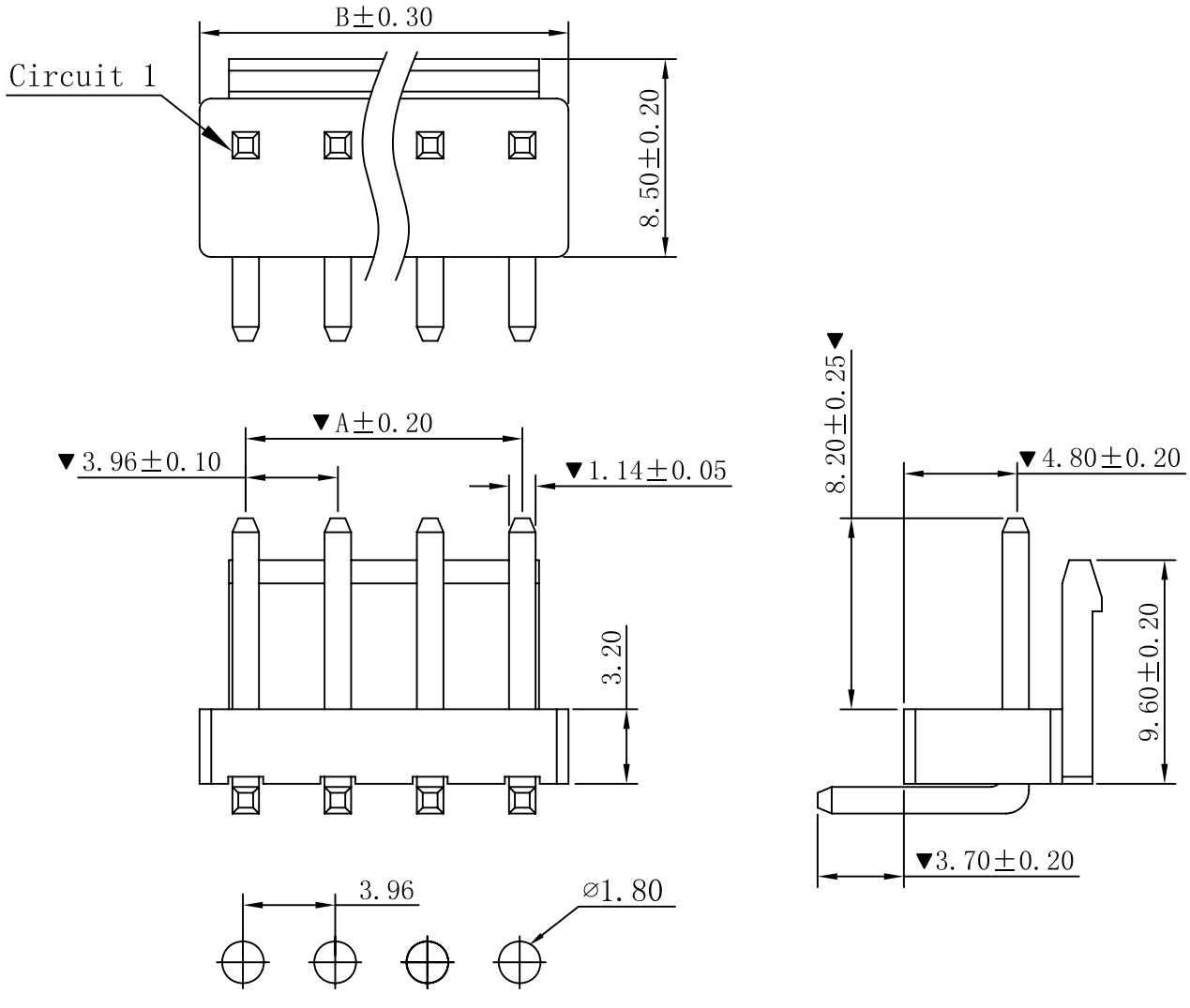

■ SPECIFICATIONS

- Voltage rating: 250V AC, DC
- Current rating: 7A, AC, DC
- Withstanding Voltage: 1500V AC/minute
- Insulation resistance:1000MΩ min
- Temperature range: -25° C~+85° C
- Contact resistance: 20mΩ max

■ WAFER

- Part No.: W3961R-NP-DW-WL3.7
- Poles : 02-16P
- Housing Material: Nylon66 UL94V-0
- Pin Material: Brass
- Contact Area Plating: Tin-Plated
- The Dimension Marked "▼" Must Be Recorded
  PIN L=1.14x20.0

PART NO.	Dimensions (mm)	
	A	B
02	3.96	7.92
03	7.92	11.88
04	11.88	15.84
05	15.84	19.80
06	19.80	23.76
07	23.76	27.72
08	27.72	31.68
09	31.68	35.64
10	35.64	39.60
11	39.60	43.56
12	43.56	47.52
13	47.52	51.48
14	51.48	55.44
15	55.44	59.40
16	59.40	63.36

MARK	DESCRIPTION	DATE	REVISED	APPROVED
ΔX				
ΔX				
ΔX				

REVISIONS

www.hiemi.cn

UNSPECIFIED TOLERANCES	
ANGLAR	±5°
L≤ 4	±0.2
4<L≤ 16	±0.3
16<L≤ 63	±0.4
L> 63	±0.5

HIEMI TECHNOLOGY CO., LTD

DSND		SCALE: N/A
DWN		VIEW:
CHKD		UNIT: mm/in
APPD		SIZE: A4

MODEL TYPE: VH3.96mm Terminal Connector Series

PART NO.: W3961R-NP-DW-WL3.7

DWG NO.:

WEIGHT	SHEET	REVISION
	1/1	A0

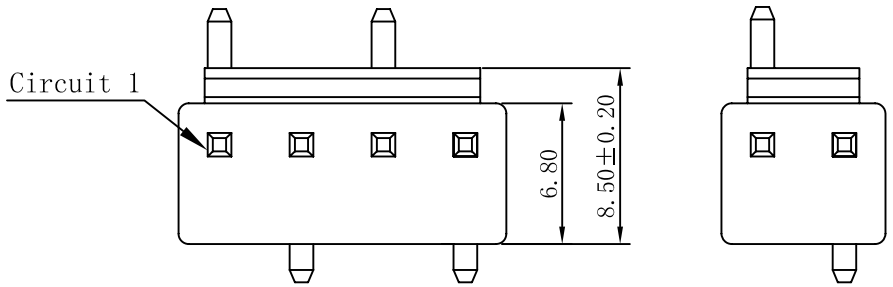

■ SPECIFICATIONS

- Voltage rating: 250V AC, DC
- Current rating: 7A, AC, DC
- Withstanding Voltage: 1500V AC/minute
- Insulation resistance:1000MΩ min
- Temperature range: -25° C~+85° C
- Contact resistance: 20mΩ max

■ WAFER

- Part No.: W3961SV-NP-D13.2
- Poles : 02-16P
- Housing Material: Nylon66 UL94V-0
- Pin Material: Brass
- Contact Area Plating: Gold-flash or Tin-plated
- The Dimension Marked "▼" Must Be Recorded

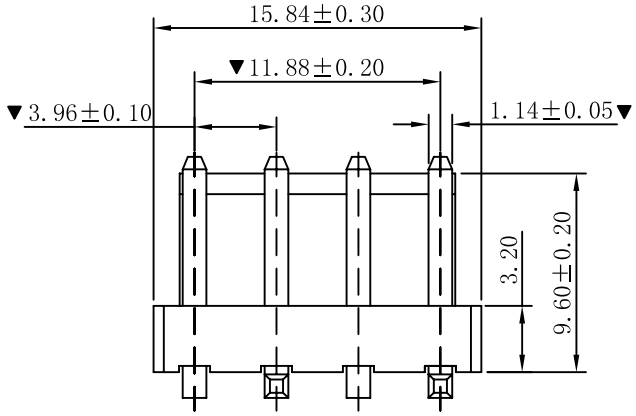

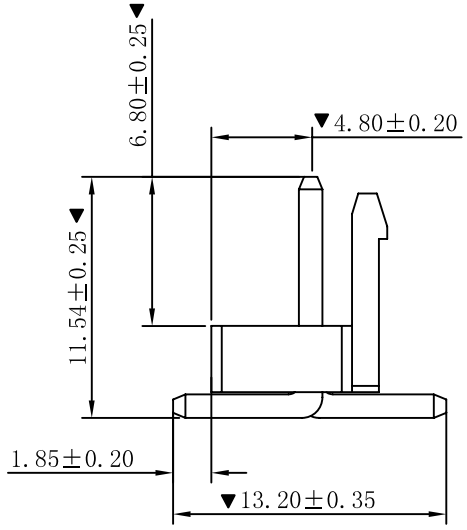

PART NO.	Dimensions (mm)	
	A	B
02	3.96	7.92
03	7.92	11.88
04	11.88	15.84
05	15.84	19.80
06	19.80	23.76
07	23.76	27.72
08	27.72	31.68
09	31.68	35.64
10	35.64	39.60
11	39.60	43.56
12	43.56	47.52
13	47.52	51.48
14	51.48	55.44
15	55.44	59.40
16	59.40	63.36

MARK	DESCRIPTION	DATE	REVISED	APPROVED
ΔX				
ΔX				
ΔX				

REVISIONS

UNSPECIFIED TOLERANCES	
ANGLAR	±5°
L≤ 4	±0.2
4<L≤ 16	±0.3
16<L≤ 63	±0.4
L> 63	±0.5

www.hiemi.cn

DSND		SCALE: N/A
DWN		VIEW:
CHKD		UNIT: mm/in
APPD		SIZE: A4

HIEMI TECHNOLOGY CO., LTD

MODEL TYPE: VH3.96mm Terminal Connector Series

PART NO.: W3961SV-NP-D13.2

DWG NO.:

WEIGHT	SHEET	REVISION
	1/1	A0

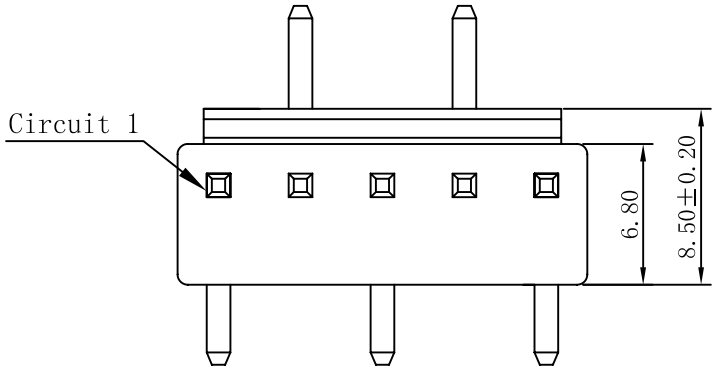

■ SPECIFICATIONS

- Voltage rating: 250V AC, DC
- Current rating: 7A, AC, DC
- Withstanding Voltage: 1500V AC/minute
- Insulation resistance:1000MΩ min
- Temperature range: -25° C~+85° C
- Contact resistance: 20mΩ max

■ WAFER

- Part No.: W3961SV-NP
- Poles : 02-16P
- Housing Material: Nylon66 UL94V-0
- Pin Material: Brass
- Contact Area Plating: Gold-flash or Tin-plated
- The Dimension Marked "▼" Must Be Recorded
  PIN L=1.14x19.10

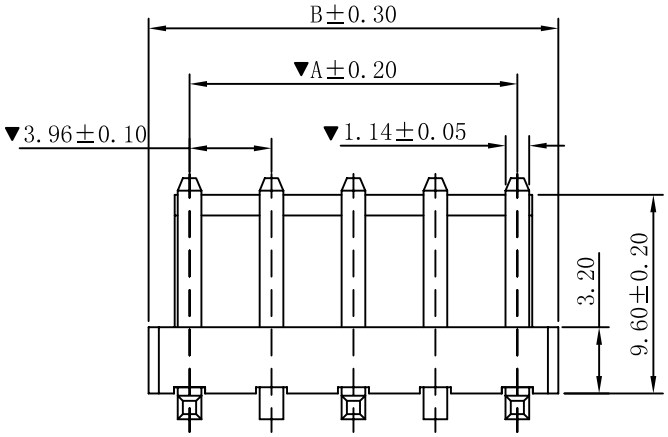

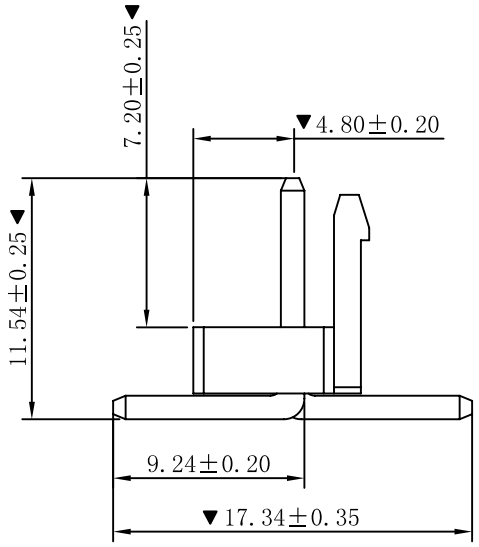

PART NO.	Dimensions (mm)	
	A	B
02	3.96	7.92
03	7.92	11.88
04	11.88	15.84
05	15.84	19.80
06	19.80	23.76
07	23.76	27.72
08	27.72	31.68
09	31.68	35.64
10	35.64	39.60
11	39.60	43.56
12	43.56	47.52
13	47.52	51.48
14	51.48	55.44
15	55.44	59.40
16	59.40	63.36

MARK	DESCRIPTION	DATE	REVISED	APPROVED
ΔX				
ΔX				
ΔX				

REVISIONS

UNSPECIFIED TOLERANCES	
ANGLAR	±5°
L≤ 4	±0.2
4<L≤ 16	±0.3
16<L≤ 63	±0.4
L> 63	±0.5

www.hiemi.cn

DSND		SCALE: N/A	MODEL TYPE: VH3.96mm Terminal Connector Series
DWN		VIEW:	PART NO.: W3961SV-NP
CHKD		UNIT: mm/in	DWG NO.:
APPD		SIZE: A4	

HIEMI TECHNOLOGY CO., LTD

WEIGHT	SHEET	REVISION
	1/1	A0

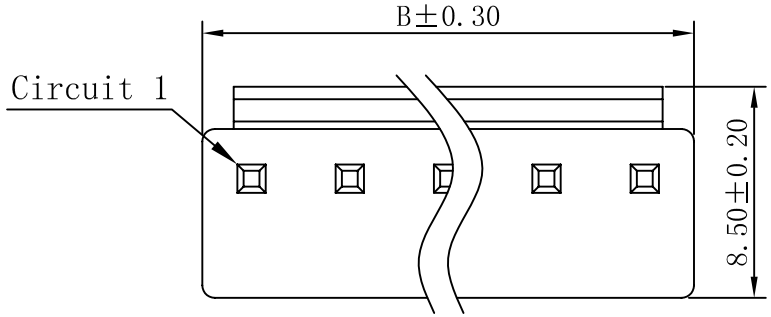

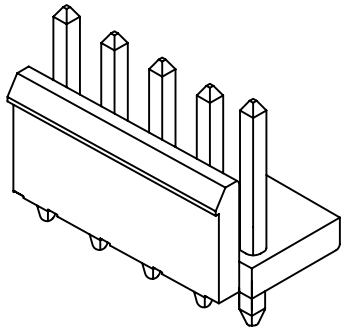

■ SPECIFICATIONS

- Voltage rating: 250V AC, DC
- Current rating: 7A, AC, DC
- Withstanding Voltage: 1500V AC/minute
- Insulation resistance:1000MΩ min
- Temperature range: -25° C~+85° C
- Contact resistance: 20mΩ max

■ WAFER

- Part No.: W3961V-NP
- Poles : 02-16P
- Housing Material: Nylon66 UL94V-0
- Pin Material: Brass
- Contact Area Plating: Tin-Plated
- The Dimension Marked "▼" Must Be Recorded

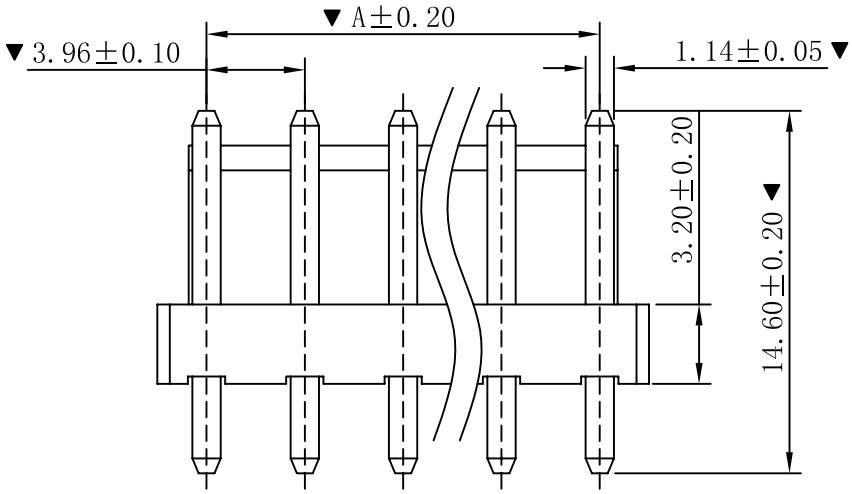

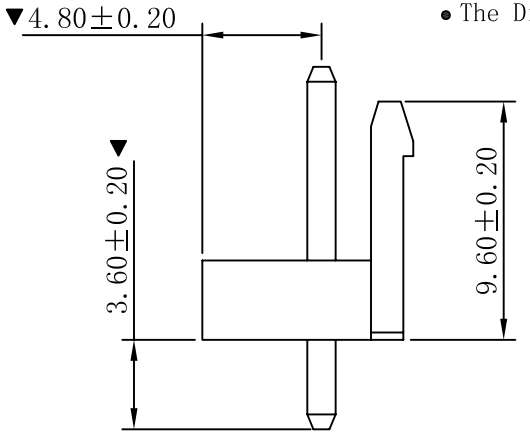

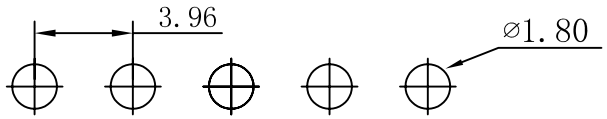

P.C.B. LAYOUT

PART NO.	Dimensions (mm)	
	A	B
02	3.96	7.92
03	7.92	11.88
04	11.88	15.84
05	15.84	19.80
06	19.80	23.76
07	23.76	27.72
08	27.72	31.68
09	31.68	35.64
10	35.64	39.60
11	39.60	43.56
12	43.56	47.52
13	47.52	51.48
14	51.48	55.44
15	55.44	59.40
16	59.40	63.36

MARK	DESCRIPTION	DATE	REVISED	APPROVED
ΔX				
ΔX				
ΔX				

REVISIONS

UNSPECIFIED TOLERANCES	
ANGLAR	±5°
L≤ 4	±0.2
4<L≤ 16	±0.3
16<L≤ 63	±0.4
L> 63	±0.5

www.hiemi.cn

HIEMI TECHNOLOGY CO., LTD

DSND		SCALE: N/A
DWN		VIEW:
CHKD		UNIT: mm/in
APPD		SIZE: A4

MODEL TYPE: VH3.96mm Terminal Connector Series

PART NO.: W3961V-NP

DWG NO.:

WEIGHT	SHEET	REVISION
	1/1	A0

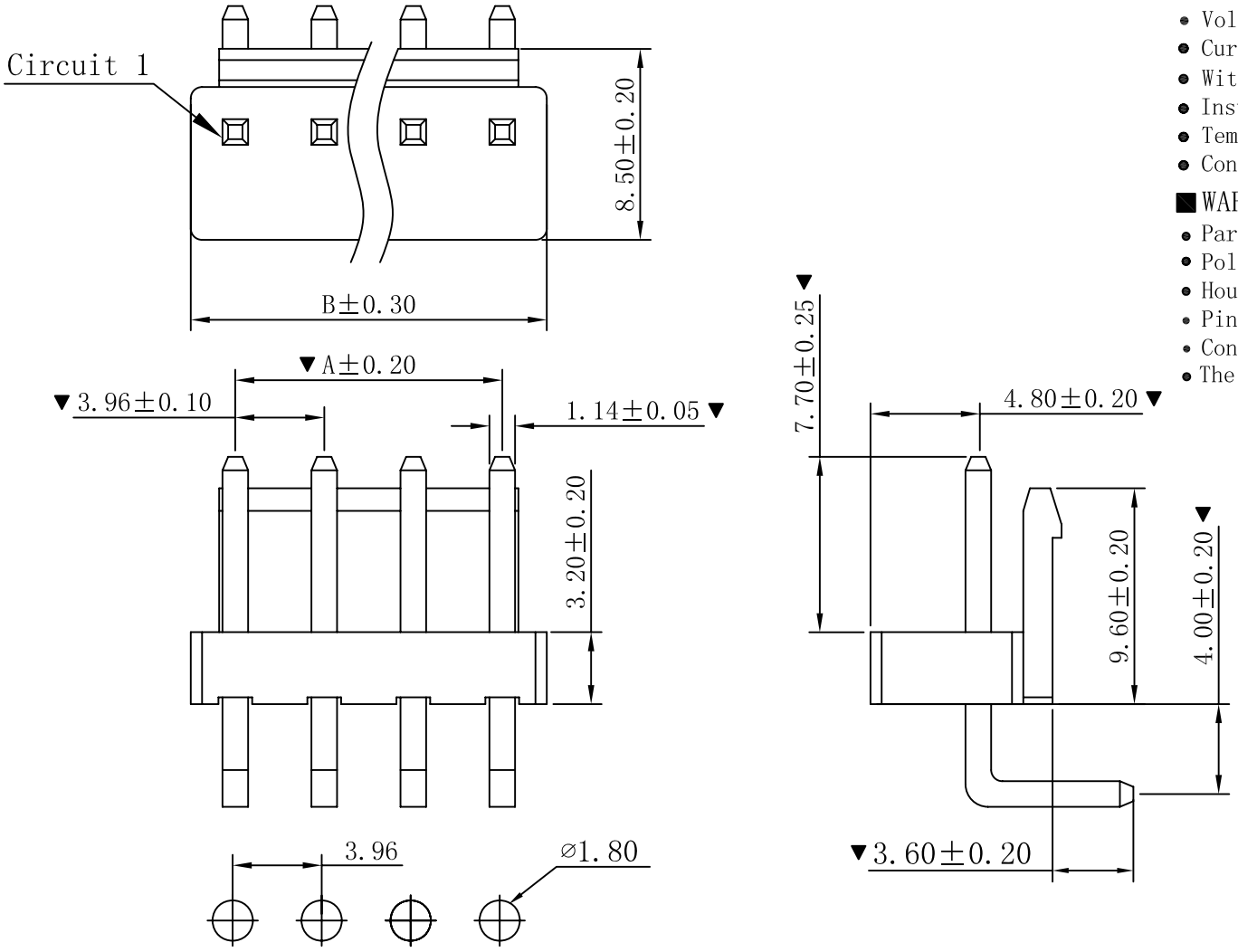

P.C.B. LAYOUT

■ SPECIFICATIONS

- Voltage rating: 250V AC, DC
- Current rating: 7A, AC, DC
- Withstanding Voltage: 1500V AC/minute
- Insulation resistance:1000MΩ min
- Temperature range: -25° C~+85° C
- Contact resistance: 20mΩ max

■ WAFER

- Part No.: W3961R-NP-FW
- Poles : 02-16P
- Housing Material: Nylon66 UL94V-0
- Pin Material: Brass
- Contact Area Plating: Tin-Plated
- The Dimension Marked "▼" Must Be Recorded

PART NO.	Dimensions (mm)	
	A	B
02	3.96	7.92
03	7.92	11.88
04	11.88	15.84
05	15.84	19.80
06	19.80	23.76
07	23.76	27.72
08	27.72	31.68
09	31.68	35.64
10	35.64	39.60
11	39.60	43.56
12	43.56	47.52
13	47.52	51.48
14	51.48	55.44
15	55.44	59.40
16	59.40	63.36

MARK	DESCRIPTION	DATE	REVISED	APPROVED
ΔX				
ΔX				
ΔX				

REVISIONS

UNSPECIFIED TOLERANCES	
ANGLAR	±5°
L≤ 4	±0.2
4<L≤ 16	±0.3
16<L≤ 63	±0.4
L> 63	±0.5

www.hiemi.cn

DSND		SCALE: N/A
DWN		VIEW:
CHKD		UNIT: mm/in
APPD		SIZE: A4

HIEMI TECHNOLOGY CO., LTD

MODEL TYPE: VH3.96mm Terminal Connector Series

PART NO.: W3961R-NP-FW

DWG NO.:

WEIGHT	SHEET	REVISION
	1/1	A0