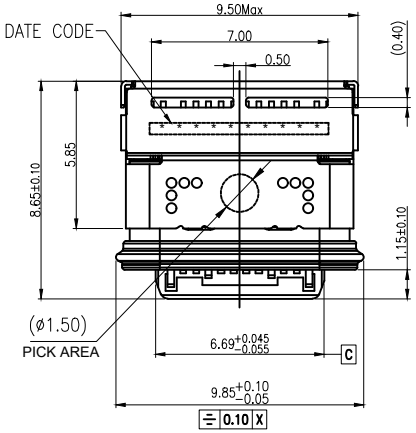

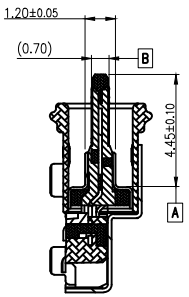

SECTION: A-A

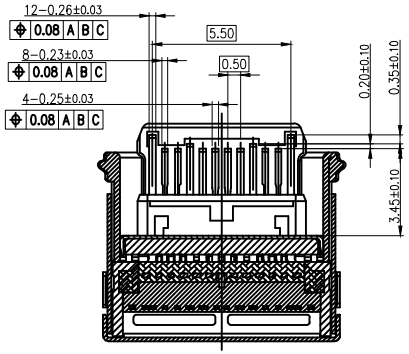

SECTION:B-B

SPECIFICATION:
1. Material & Finish:See the list
2. Mechanical:
   2.1.Mating force:5−20N
   2.2.Unmating force:Initial:8−20N;Final:6−20N
   2.3.Durability:10000 Cycles
3.Electrical:
   3.1.Current Rating:
   VBus Pins:5A, Vconn Pin:1.25A, Other Pins:0.25A
   3.2.Voltage Rating:30V Max.;
   3.3.Dielectric Withstanding volage:100Vac,60S,10mA
   3.4.Contact resistance:40m Ohms Max.;
   3.5.Insulation Resistance:100M Ohms Min.
4.Environmental:
   4.1.Operating temperature:−40°C~+85°C;
   4.2.Salt Spray Test:48H Min.(No oxidation or rust)
   4.3.Wetting Temperature:265±5°C,5±0.5s
   4.5.Waterproof Level:IPX8

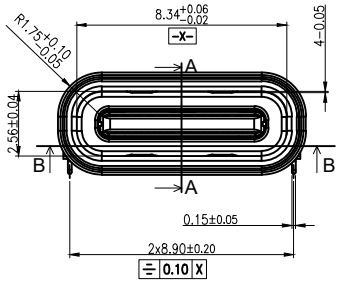

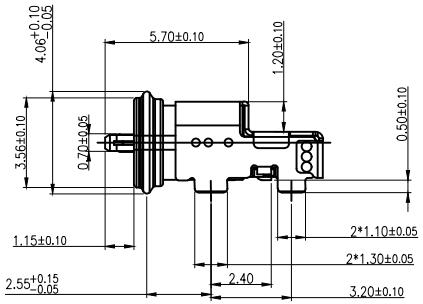

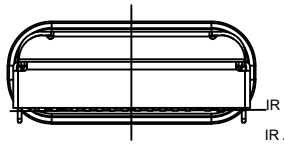

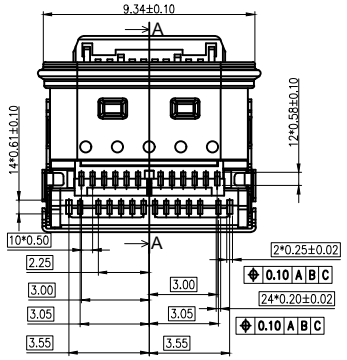

PIN	Signal Name	Description	PIN	Signal Name	Description
A1	GND	Ground return	B12	GND	Ground return
A2	SSTXp1	Positive half of first SuperSpeed TX differential pair	B11	SSRXp1	Positive half of first SuperSpeed RX differential pair
A3	SSTXn1	Negative half of first SuperSpeed TX differential pair	B10	SSRXn1	Negative half of first SuperSpeed RX differential pair
A4	VBUS	Bus Power	B9	VBUS	Bus Power
A5	CC1	Configuration Channel	B8	SBU2	Sideband Use (SBU)
A6	Dp1	Positive half of the USB 2.0 differential pair−Position 1	B7	Dn2	Negative half of the USB 2.0 differential pair−Position 2
A7	Dn1	Negative half of the USB 2.0 differential pair−Position 1	B6	Dp2	Positive half of the USB 2.0 differential pair−Position 2
A8	SBU1	Sideband Use(SBU)	B5	CC2	Configuraation Channel
A9	VBUS	Bus Power	B4	VBUS	Bus Power
A10	SSRXn2	Negative half of second SuperSpeed RX differential pair	B3	SSTXn2	Negative half of second SuperSpeed TX differential pair
A11	SSRXp2	Positive half of second SuperSpeed RX differential pair	B2	SSTXp2	Positive half of second SuperSpeed TX differential pair
A12	GND	Ground return	B1	GND	Ground return

NO.	NAME		METERIAL	REMARKS	QTY
6	GLUE		EPOXY RESIN	COLOR:BLACK	g
5	LIM RING		SLILICA GEL	NA	1 PCS
4	EMC		SUS 316L,T=0.12mm	CLEAN	1 PCS
3	OUT SHELL		SUS 304-H,T=0.25mm	50u" NICKEL PLATED	1 PCS
2	INNER SHELL		SUS 316L,T=0.20mm	NO PLATING	1 PCS
1	INSERT MD	1.1	MID PLATE, SUS 301-H,T=0.15mm	50u" SOLDER NICKEL PLATED	SET
		1.2	CONTACT:C18400,T=0.12mm	15u "AU/NICKEL PLATED	
		1.3	PLASTIC:PA46	COLOR:BLACK,UL94V-0	

IP-X8

MARK	DESCRIPTION	DATE	REVISED	APPROVED
△X				
△X				
△X				

REVISIONS

ANGLAR	±5°
L≤ 4	±0.2
4<L≤ 16	±0.3
16<L≤ 63	±0.4
L> 63	±0.5

UNSPECIFIED TOLERANCES

www.hiemi.cn

HIEMI TECHNOLOGY CO., LTD

DSND		SCALE: N/A	USB TYPE CF 24 PIN 4OG板上双贴成品(TID版)
DWN		VIEW:	PART NO.: 82224-619
CHKD		UNIT: mm/in	DWG NO.: C-82224-619
APPD		SIZE: A4	

WEIGHT	SHEET	REVISION
	1/1	A0

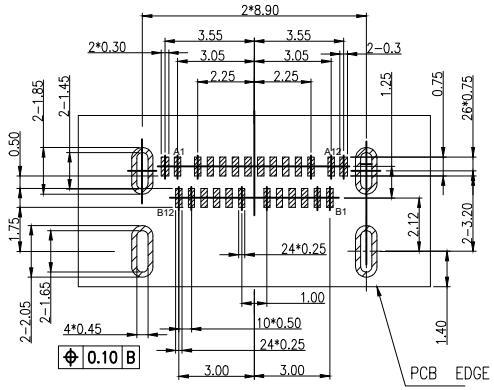

RECOMMENDED PCB LAYOUT
(Tolerance=±0.05)

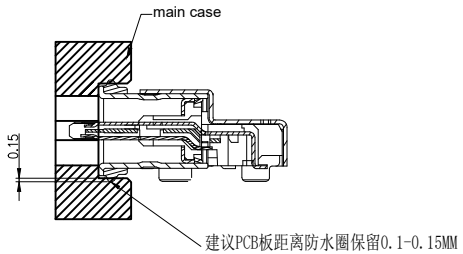

SECTION A-A
PANEL CUT-OUT REFERENCE

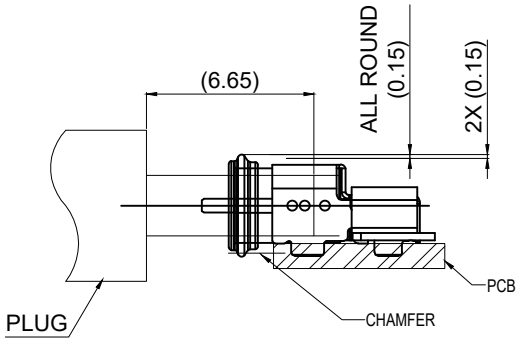

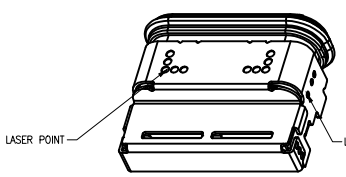

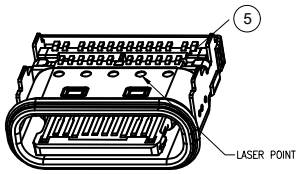

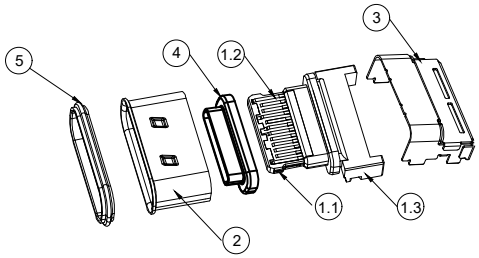



MARK	DESCRIPTION	DATE	REVISED	APPROVED
△X				
△X				
△X				

REVISIONS

UNSPECIFIED TOLERANCES	
ANGLAR	±5°
L≤ 4	±0.2
4<L≤ 16	±0.3
16<L≤ 63	±0.4
L> 63	±0.5

www.hiemi.cn

HIEMI TECHNOLOGY CO., LTD

DSND		SCALE: N/A	USB TYPE CF 24 PIN 4OG板上双贴成品(TID版)
DWN		VIEW:	PART NO.: 82224-619
CHKD		UNIT: mm/in	DWG NO.: C-82224-619
APPD		SIZE: A4	

WEIGHT	SHEET	REVISION
	1/1	A0

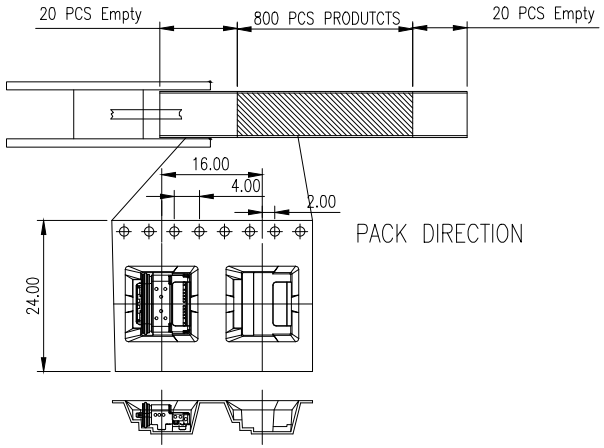

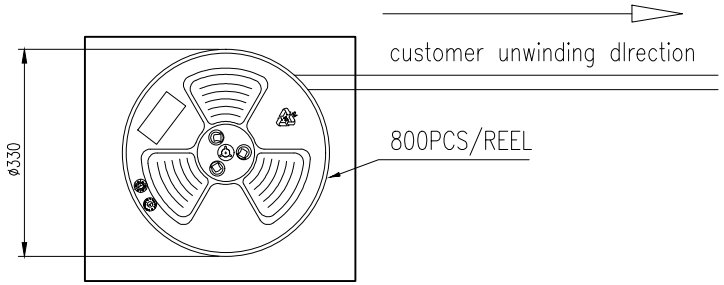

Vacuum Packing

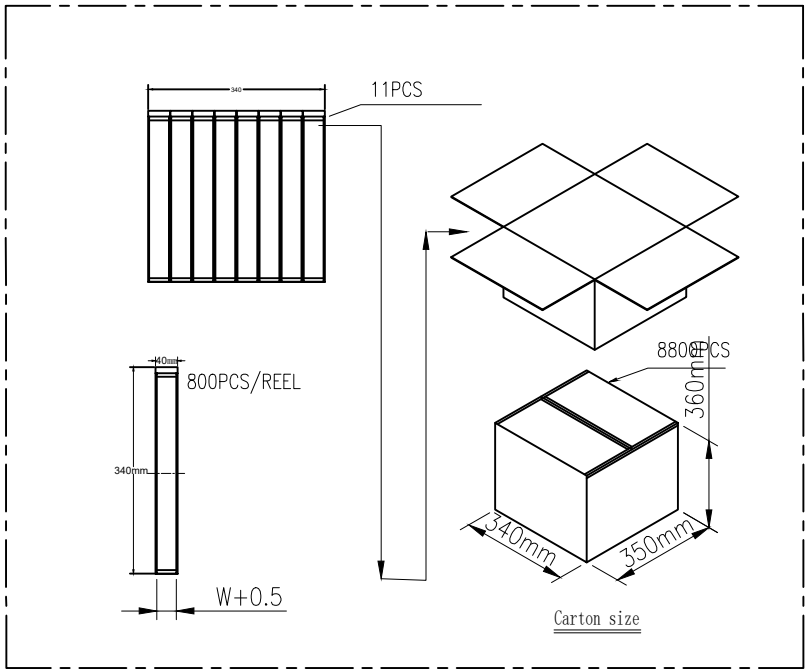

	REEL	CARTON
CONNECTOR (PCS)	800	8800

					ANGLAR	±5°
△X					L≤ 4	±0.2
△X					4<L≤ 16	±0.3
△X					16<L≤ 63	±0.4
MARK	DESCRIPTION	DATE	REVISED	APPROVED	L> 63	±0.5
REVISIONS					UNSPECIFIED TOLERANCES	

www.hiemi.cn

HIEMI TECHNOLOGY CO., LTD

DSND		SCALE: N/A	USB TYPE CF 24 PIN 40G板上双贴成品(TID版)
DWN		VIEW:	PART NO.: 82224-619
CHKD		UNIT: mm/in	DWG NO.: C-82224-619
APPD		SIZE: A4	

WEIGHT	SHEET	REVISION
	1/1	A0