

3D VIEW

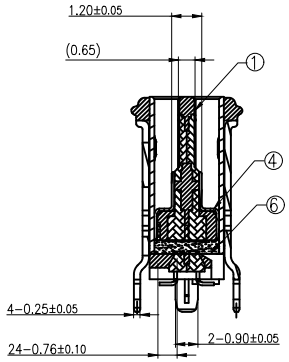

SECTION :A-A

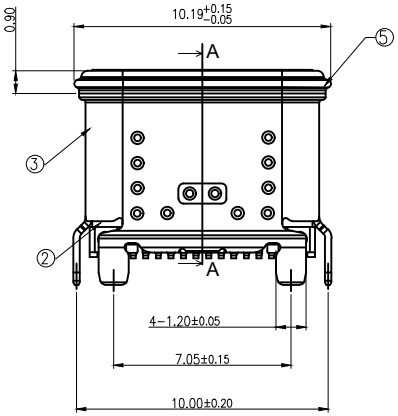

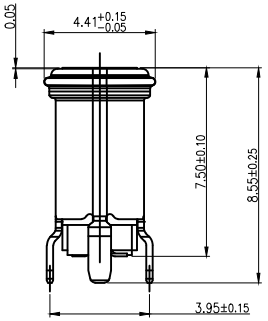

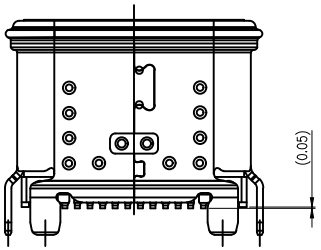

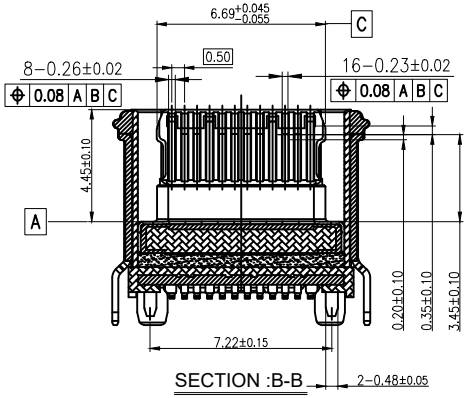

SECTION :B-B

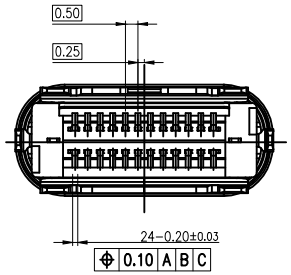

6	GLUE	EPOXY RESIN	COLOR:BLACK	g		
5	LIM_ RING	SLILICA GEL	NA	1 PCS		
4	EMC	SUS 316L, T=0.12mm	CLEAN	1 PCS		
3	OUT SHELL	SUS 304-H, T=0.25mm	50u" NICKEL PLATED	1 PCS		
2	INNER SHELL	SUS 316L, T=0.20mm	NO PLATING	1 PCS		
1	INSERT MD	MID PLATE, SUS 301-H, T=0.15mm	NO PLATING	SET		
		CONTACT:C18400, T=0.12mm	AU/NICKEL PLATED			
		PLASTIC:PA46	COLOR:BLACK, UL94V_0			
NO.	NAME	METERIAL	REMARKS	QTY		

MARK	DESCRIPTION	DATE	REVISED	APPROVED
△X				
△X				
△X				

REVISIONS

ANGLAR	±5°
L≤ 4	±0.2
4<L≤ 16	±0.3
16<L≤ 63	±0.4
L> 63	±0.5

UNSPECIFIED TOLERANCES

www.hiemi.cn

HIEMI TECHNOLOGY CO., LTD

DSND		SCALE: N/A	USB TYPE C 24 PIN 立贴防水母座，H=7.50mm
DWN		VIEW:	PART NO.: 82224-615
CHKD		UNIT: mm/in	DWG NO.: C-82224-615
APPD		SIZE: A4	

WEIGHT	SHEET	REVISION
	1/1	A0

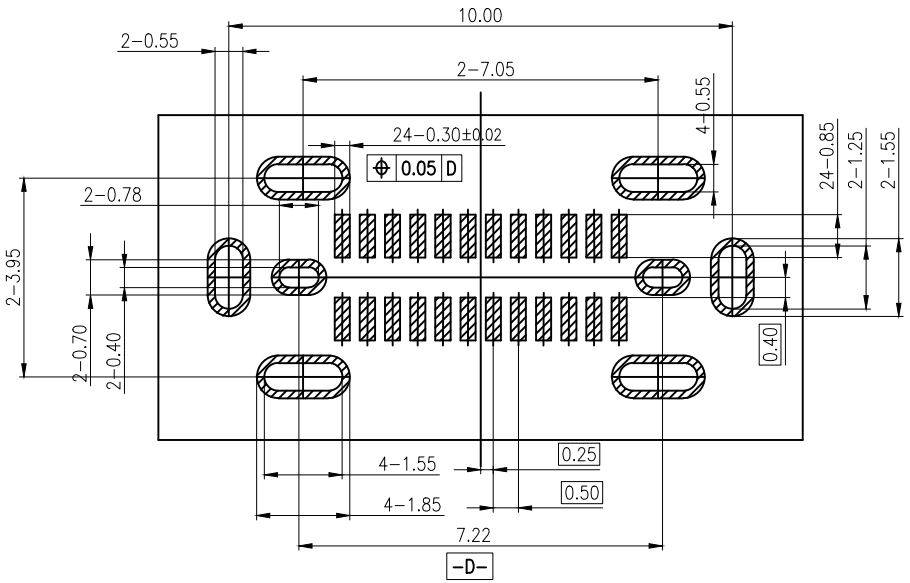

USB TYPE-C FULL-FEATURED RECEPTACLE
INTERFACE PIN ASSIGNMENTS

PIN	Signal Name	Description	PIN	Signal Name	Description
A1	GND	Ground return	B12	GND	Ground return
A2	SSTXp1	Positive half of firs SuperSpeed TX differential pair	B11	SSRXp1	Positive half of firs SuperSpeed RX differential pair
A3	SSTXn1	Negative half of first SuperSpeed TX differential pair	B10	SSRXn1	Negative half of first SuperSpeed RX differential pair
A4	VBUS	Bus Power	B9	VBUS	Bus Power
A5	CC1	Configuration Channel	B8	SBU2	Sideband Use(SBU)
A6	Dp1	Positive half of the USB 2.0 differential pair-Position 1	B7	Dn2	Negative half of the USB 2.0 differential pair-Position 2
A7	Dn1	Negative half of the USB 2.0 differential pair-Position 1	B6	Dp2	Positive half of the USB 2.0 differential pair-Position 2
A8	SBU1	Sideband Use(SBU)	B5	CC2	Configuration Channel
A9	VBUS	Bus Power	B4	VBUS	Bus Power
A10	SSRXn2	Negative half of second SuperSpeed RX differential pair	B3	SSTXn2	Negative half of second SuperSpeed TX differential pair
A11	SSRXp2	Positive half of second SuperSpeed RX differential pair	B2	SSTXp2	Positive half of second SuperSpeed TX differential pair
A12	GND	Ground return	B1	GND	Ground return

RECOMMENDED PCB LAYOUT(SCALE 2:1)

TOLERANCE UNSPECIFIED±0.05mm



MARK	DESCRIPTION	DATE	REVISED	APPROVED
△X				
△X				
△X				

REVISIONS

UNSPECIFIED TOLERANCES	
ANGLAR	±5°
L≤ 4	±0.2
4<L≤ 16	±0.3
16<L≤ 63	±0.4
L> 63	±0.5

www.hiemi.cn

HIEMI TECHNOLOGY CO., LTD

DSND		SCALE: N/A	USB TYPE C 24 PIN 立贴防水母座，H=7.50mm
DWN		VIEW:	PART NO.: 82224-615
CHKD		UNIT: mm/in	DWG NO.: C-82224-615
APPD		SIZE: A4	

WEIGHT	SHEET	REVISION
	1/1	A0

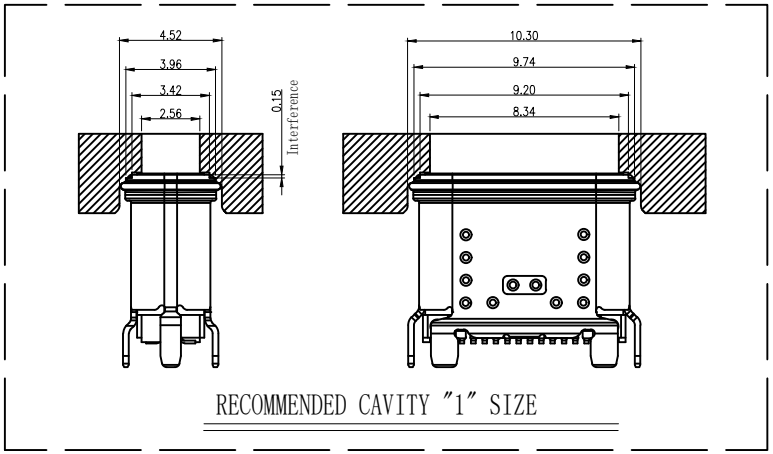

RECOMMENDED CAVITY "1" SIZE

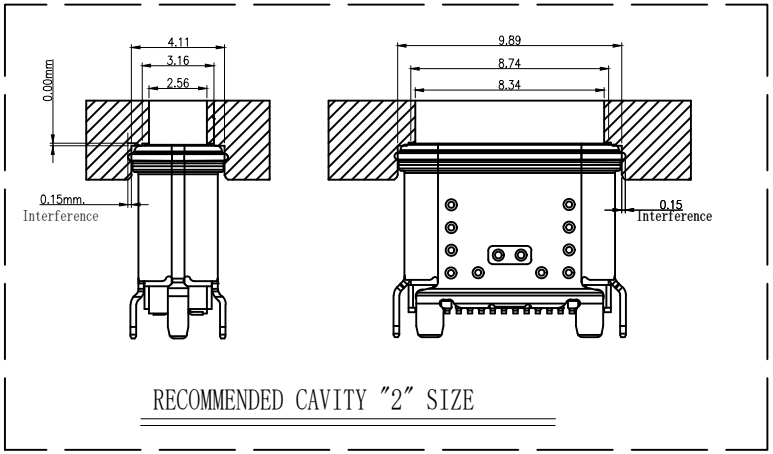

RECOMMENDED CAVITY "2" SIZE



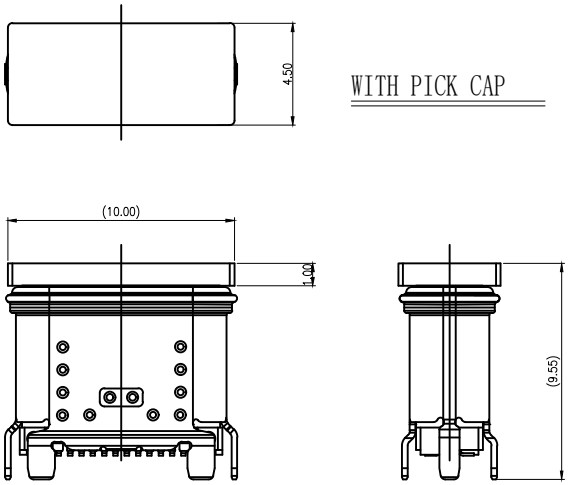

WITH PICK CAP

					ANGLAR	±5°
△X					L≤ 4	±0.2
△X					4<L≤ 16	±0.3
△X					16<L≤ 63	±0.4
MARK	DESCRIPTION	DATE	REVISED	APPROVED	L> 63	±0.5
REVISIONS					UNSPECIFIED TOLERANCES	

www.hiemi.cn

HIEMI TECHNOLOGY CO., LTD

DSND		SCALE: N/A	USB TYPE C 24 PIN 立贴防水母座，H=7.50mm
DWN		VIEW:	PART NO.: 82224-615
CHKD		UNIT: mm/in	DWG NO.: C-82224-615
APPD		SIZE: A4	

WEIGHT	SHEET	REVISION
	1/1	A0

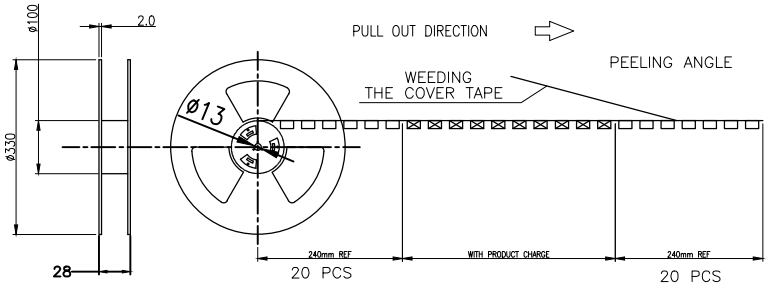

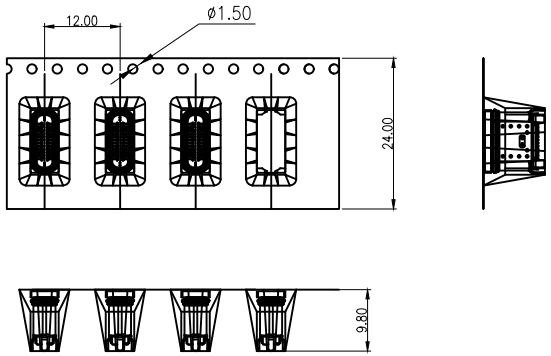

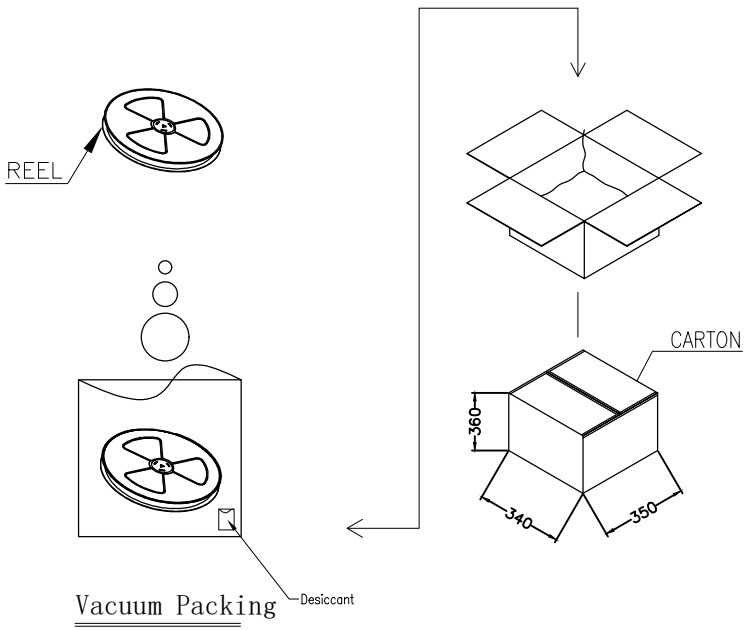

	REEL	CARTON
CONNECTOR (PCS)	520	5200

备注:

1. 包装数量：520PCS/RELL, 10 REEL/CARTON，共5200PCS.
2. 材料:纸箱:纤维板，瓦楞，双层壁.
3. 载带剥离强度:0.1 ~ 1.3 N(10 ~ 130克)
4. 脱皮速度:300mm /min。
5. 外箱上贴号物料标签及RoHS标签
6. 同一产品只能装同一纸箱，不允其它产品;
7. 每个袋子都应包括干燥剂*1

MARK	DESCRIPTION	DATE	REVISED	APPROVED
△X				
△X				
△X				

REVISIONS

UNSPECIFIED TOLERANCES	
ANGLAR	±5°
L≤ 4	±0.2
4<L≤ 16	±0.3
16<L≤ 63	±0.4
L> 63	±0.5

www.hiemi.cn

HIEMI TECHNOLOGY CO., LTD

DSND		SCALE: N/A	USB TYPE C 24 PIN 立贴防水母座，H=7.50mm
DWN		VIEW:	PART NO.: 82224-615
CHKD		UNIT: mm/in	DWG NO.: C-82224-615
APPD		SIZE: A4	

WEIGHT	SHEET	REVISION
	1/1	A0