

3D VIEW

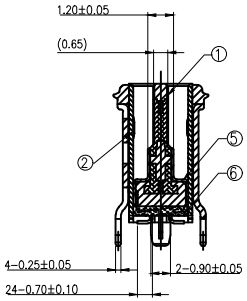


SECTION :A-A

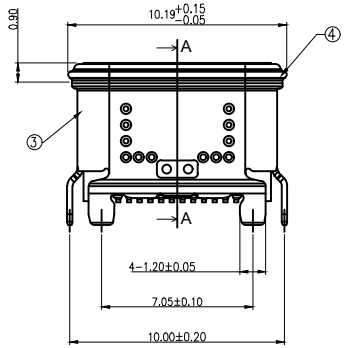


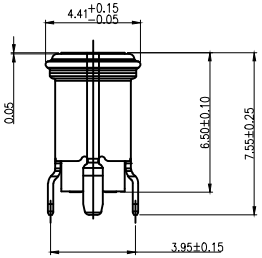


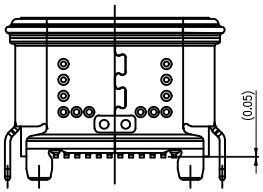


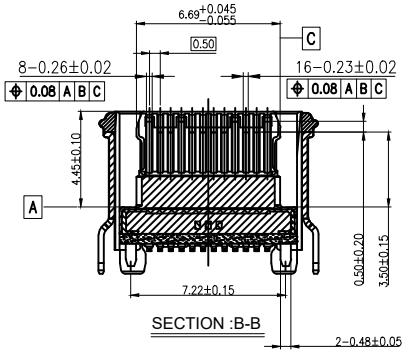


SECTION :B-B

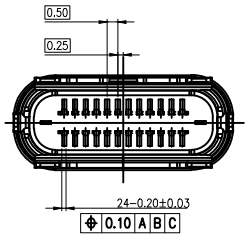


SPECIFICATION:
1. Material & Finish:See the list
2. Mechanical:
   2.1.Mating force:5-20N
   2.2.Unmating force:Initial:8-20N;Final:6-20N
   2.3.Durability:10000 Cycles
3.Electrical:
   3.1.Current Rating:5A.
   3.2.Voltage Rating:30V Max.;
   3.3.Dielectric Withstanding volage:100Vac,60S,10mA
   3.4.Contact resistance:40m Ohms Max.;
   3.5.Insulation Resistance:100M Ohms Min.
4.Environmental:
   4.1.Operating temperature:-40°C~+85°C;
   4.2.Salt Spray Test:48H Min.(No oxidation or rust)
   4.3.Wetting Temperature:265±5°C,5±0.5s
   4.5.Waterproof Level:IPX8

| NO. | NAME | METERIAL | REMARKS | QTY |
|---|---|---|---|---|
| 6 | GLUE | EPOXY RESIN | COLOR:BLACK | g |
| 5 | EMC | SUS 316L, T=0.10mm | 30u" NICKEL PLATING | 1 PCS |
| 4 | LIM_ RING | SLILICA GEL | NA | 1 PCS |
| 3 | OUT SHELL | SUS 304-H, T=0.25mm | 50u" NICKEL PLATED | 1 PCS |
| 2 | INNER SHELL | SUS 316L, T=0.20mm | NO PLATING | 1 PCS |
| 1 | INSERT MD | MID PLATE, SUS 301-H, T=0.15mm | NICKEL PLATING | 1 SET |
| | | CONTACT:C18400, T=0.12mm | AU/NICKEL PLATED | |
| | | PLASTIC:PA46 | COLOR:BLACK, UL94V_0 | |

| MARK | DESCRIPTION | DATE | REVISED | APPROVED |
|---|---|---|---|---|
| △X | | | | |
| △X | | | | |
| △X | | | | |

REVISIONS

| UNSPECIFIED TOLERANCES | |
|---|---|
| ANGLAR | ±5° |
| L≤ 4 | ±0.2 |
| 4<L≤ 16 | ±0.3 |
| 16<L≤ 63 | ±0.4 |
| L> 63 | ±0.5 |

www.hiemi.cn

HIEMI TECHNOLOGY CO., LTD

| | | | |
|---|---|---|---|
| DSND | | SCALE: N/A | USB TYPE C 24 PIN 立贴防水母座，H=6.50mm |
| DWN | | VIEW: | PART NO.: 82224-614 |
| CHKD | | UNIT: mm/in | DWG NO.: C-82224-614 |
| APPD | | SIZE: A4 | |

| WEIGHT | SHEET | REVISION |
|---|---|---|
| | 1/1 | A0 |

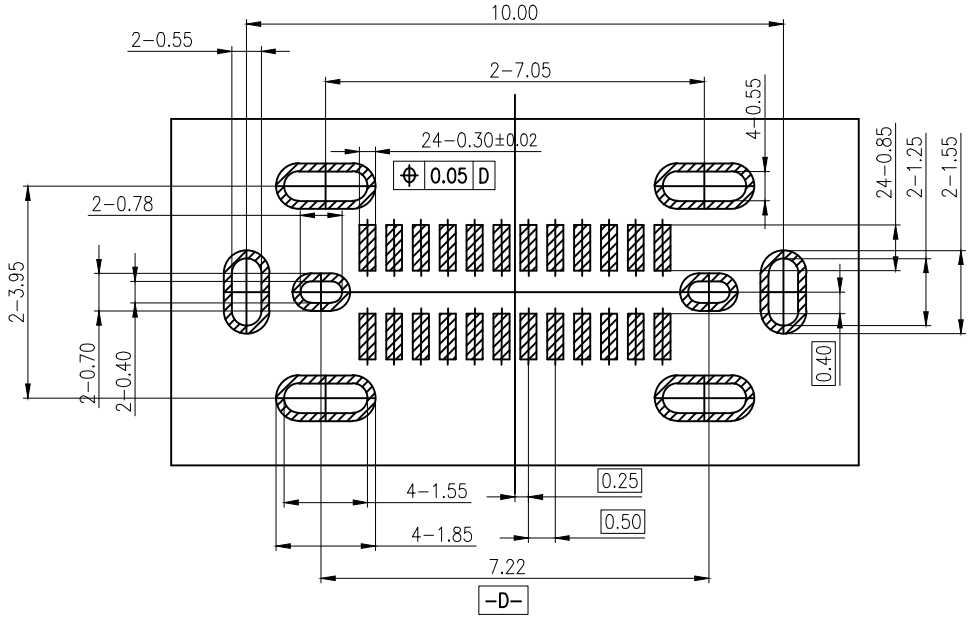


RECOMMENDED PCB LAYOUT(SCALE 2:1)

TOLERANCE UNSPECIFIED±0.05mm

USB TYPE-C FULL-FEATURED RECEPTACLE
INTERFACE PIN ASSIGNMENTS

| PIN | Signal Name | Description | PIN | Signal Name | Description |
|---|---|---|---|---|---|
| A1 | GND | Ground return | B12 | GND | Ground return |
| A2 | SSTXp1 | Positive half of firs SuperSpeed TX differential pair | B11 | SSRXp1 | Positive half of firs SuperSpeed RX differential pair |
| A3 | SSTXn1 | Negative half of first SuperSpeed TX differential pair | B10 | SSRXn1 | Negative half of first SuperSpeed RX differential pair |
| A4 | VBUS | Bus Power | B9 | VBUS | Bus Power |
| A5 | CC1 | Configuration Channel | B8 | SBU2 | Sideband Use(SBU) |
| A6 | Dp1 | Positive half of the USB 2.0 differential pair-Position 1 | B7 | Dn2 | Negative half of the USB 2.0 differential pair-Position 2 |
| A7 | Dn1 | Negative half of the USB 2.0 differential pair-Position 1 | B6 | Dp2 | Positive half of the USB 2.0 differential pair-Position 2 |
| A8 | SBU1 | Sideband Use(SBU) | B5 | CC2 | Configuration Channel |
| A9 | VBUS | Bus Power | B4 | VBUS | Bus Power |
| A10 | SSRXn2 | Negative half of second SuperSpeed RX differential pair | B3 | SSTXn2 | Negative half of second SuperSpeed TX differential pair |
| A11 | SSRXp2 | Positive half of second SuperSpeed RX differential pair | B2 | SSTXp2 | Positive half of second SuperSpeed TX differential pair |
| A12 | GND | Ground return | B1 | GND | Ground return |

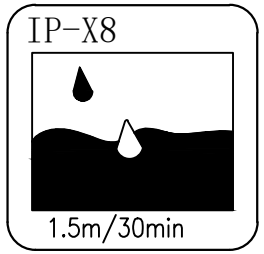


| MARK | DESCRIPTION | DATE | REVISED | APPROVED |
|---|---|---|---|---|
| | | | | |
| △X | | | | |
| △X | | | | |
| △X | | | | |

REVISIONS

| UNSPECIFIED TOLERANCES | |
|---|---|
| ANGLAR | ±5° |
| L≤ 4 | ±0.2 |
| 4<L≤ 16 | ±0.3 |
| 16<L≤ 63 | ±0.4 |
| L> 63 | ±0.5 |

www.hiemi.cn

HIEMI TECHNOLOGY CO., LTD

| | | |
|---|---|---|
| DSND | | SCALE: N/A |
| DWN | | VIEW: |
| CHKD | | UNIT: mm/in |
| APPD | | SIZE: A4 |

USB TYPE C 24 PIN 立贴防水母座，H=6.50mm

PART NO.: 82224-614

DWG NO.: C-82224-614

| WEIGHT | SHEET | REVISION |
|---|---|---|
| | 1/1 | A0 |

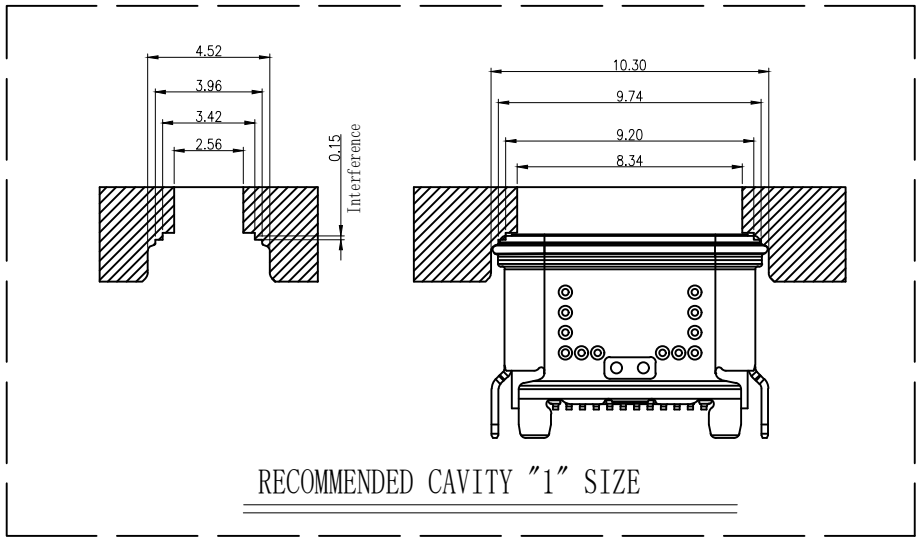


RECOMMENDED CAVITY "1" SIZE

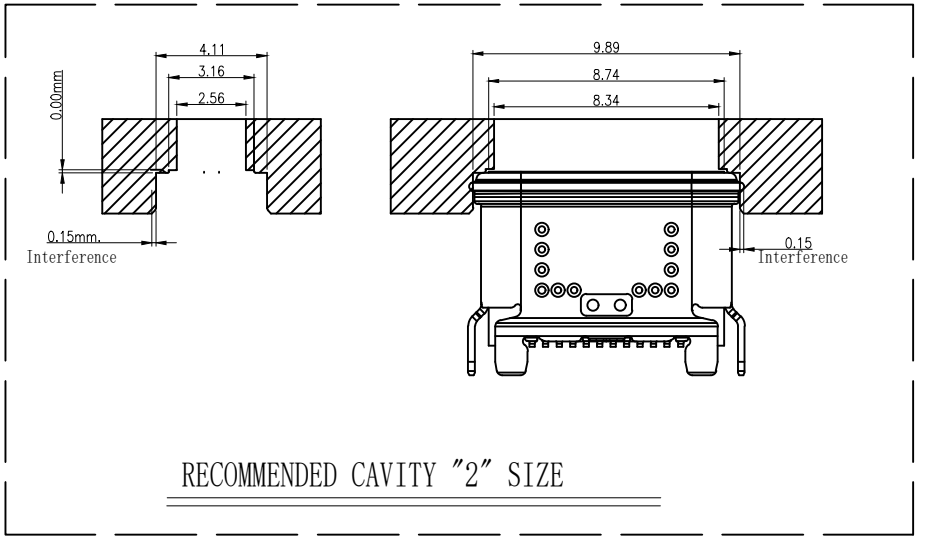


RECOMMENDED CAVITY "2" SIZE

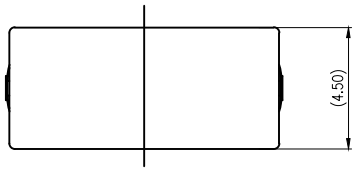


WITH PICK CAP

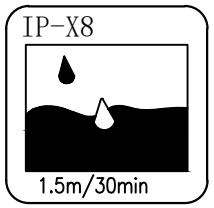


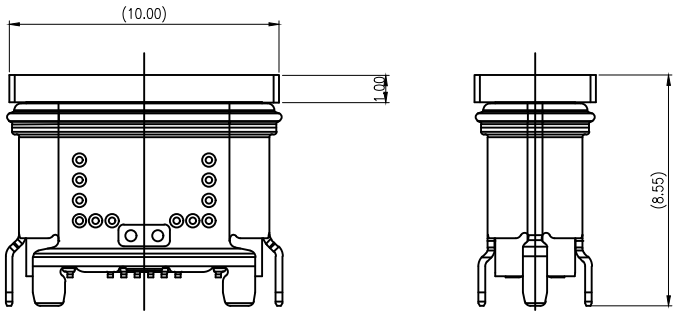


| | | | | | | |
|---|---|---|---|---|---|---|
| | | | | | ANGLAR | ±5° |
| △X | | | | | L≤ 4 | ±0.2 |
| △X | | | | | 4<L≤ 16 | ±0.3 |
| △X | | | | | 16<L≤ 63 | ±0.4 |
| MARK | DESCRIPTION | DATE | REVISED | APPROVED | L> 63 | ±0.5 |
| REVISIONS | | | | | UNSPECIFIED TOLERANCES | |

www.hiemi.cn

HIEMI TECHNOLOGY CO., LTD

| | | | |
|---|---|---|---|
| DSND | | SCALE: N/A | USB TYPE C 24 PIN 立贴防水母座，H=6.50mm |
| DWN | | VIEW: | PART NO.: 82224-614 |
| CHKD | | UNIT: mm/in | DWG NO.: C-82224-614 |
| APPD | | SIZE: A4 | |

| WEIGHT | SHEET | REVISION |
|---|---|---|
| | 1/1 | A0 |

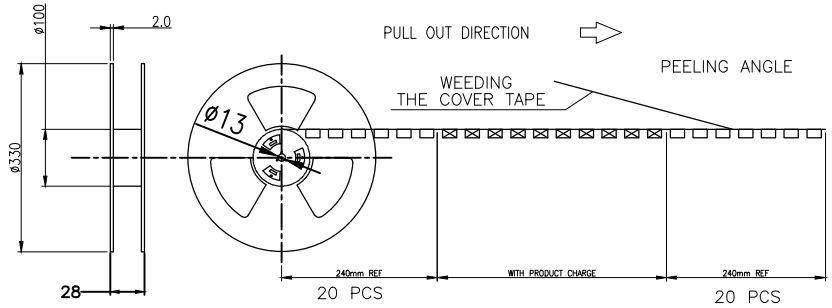


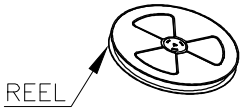


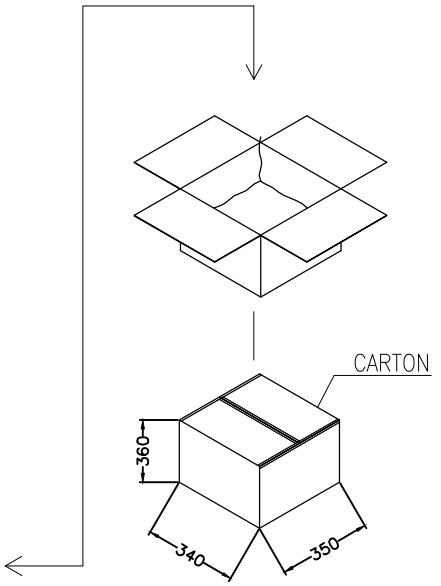


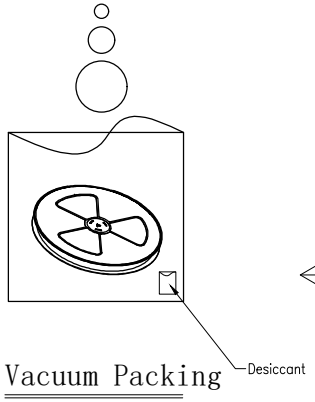


Vacuum Packing

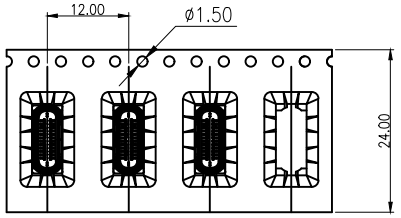




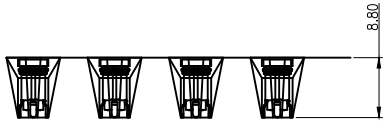


| | REEL | CARTON |
|---|---|---|
| CONNECTOR (PCS) | 600 | 6000 |

备注:

1. 包装数量：600PCS/RELL, 10 REEL/CARTON，共6000PCS.
2. 材料:纸箱:纤维板，瓦楞，双层壁.
3. 载带剥离强度:0.1 ~ 1.3 N(10 ~ 130克)
4. 脱皮速度:300mm /min。
5. 外箱上贴号物料标签及RoHS标签
6. 同一产品只能装同一纸箱，不允其它产品;
7. 每个袋子都应包括干燥剂*1

| MARK | DESCRIPTION | DATE | REVISED | APPROVED |
|---|---|---|---|---|
| | | | | |
| △X | | | | |
| △X | | | | |
| △X | | | | |

REVISIONS

| UNSPECIFIED TOLERANCES | |
|---|---|
| ANGLAR | ±5° |
| L≤ 4 | ±0.2 |
| 4<L≤ 16 | ±0.3 |
| 16<L≤ 63 | ±0.4 |
| L> 63 | ±0.5 |

www.hiemi.cn

HIEMI TECHNOLOGY CO., LTD

| | | | |
|---|---|---|---|
| DSND | | SCALE: N/A | USB TYPE C 24 PIN 立贴防水母座，H=6.50mm |
| DWN | | VIEW: | PART NO.: 82224-614 |
| CHKD | | UNIT: mm/in | DWG NO.: C-82224-614 |
| APPD | | SIZE: A4 | |

| WEIGHT | SHEET | REVISION |
|---|---|---|
| | 1/1 | A0 |