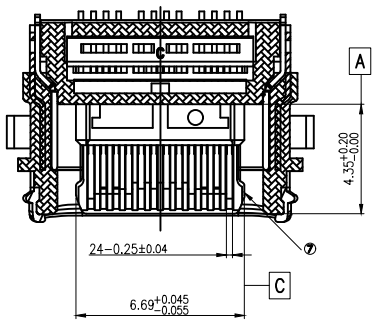

SECTION:B-B

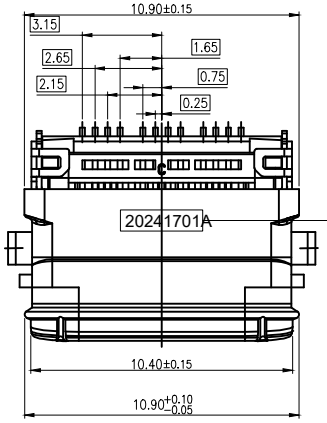

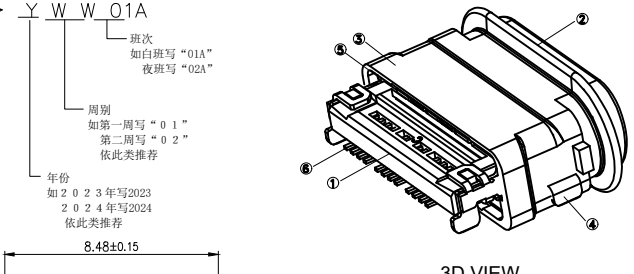

3D VIEW

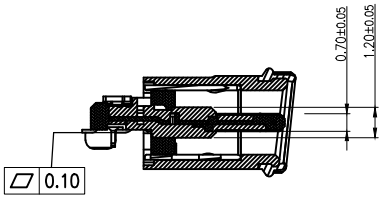

SECTION:A-A

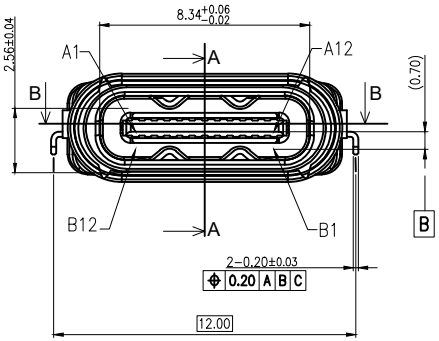

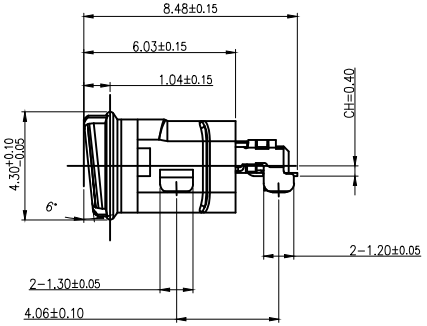

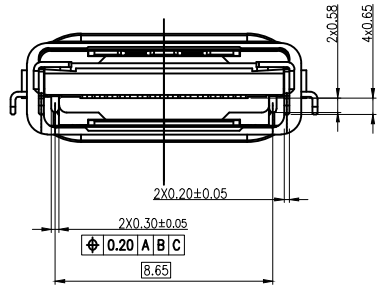

SPECIFICATION:
1.Material & Finish:See the list
2.Mechanical:
 2.1.Mating force:5-20N
 2.2.Unmating force:Initial:8-20N;Final:6-20N
 2.3.Durability:10000 Cycles
3.Electrical:
 3.1.Current Rating:
  VBus Pins:5A, Vconn Pin:1.25A, Other Pins:0.25A
 3.2.Voltage Rating:30V Max.;
 3.3.Dielectric Withstanding volage:100Vac,60S,10mA
 3.4.Contact resistance:40m Ohms Max.;
 3.5.Insulation Resistance:100M Ohms Min.
4.Environmental:
 4.1.Operating temperature:-40°C~+85°C;
 4.2.Salt Spray Test:48H Min.(No oxidation or rust)
 4.3.Wetting Temperature:265±5°C,5±0.5s
 4.5.Waterproof Level:IPX8.
 4.6.Transmission Speed:40Gbps.

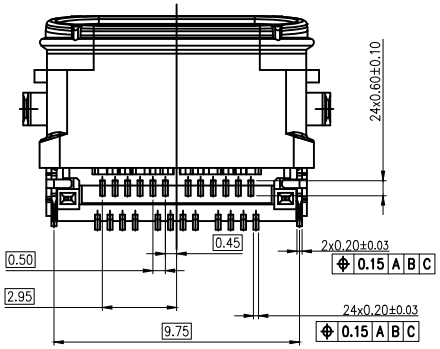

ITEM	DESCRIPTION	Q'TY	MATERIAL	FINISH
7	MID PLATE	1	STAINLESS STEEL	SOLDER NICKEL: 50U" MIN
6	TERMINAL	1 1	C18400	MATING SIDE:AU15U"; SOLDER TAIL:GOLD FLASH, 50u" NICKE OVERA L.
5	SHELL	1	STAINLESS STEEL	SOLDER NICKEL: 50U" MIN
4	SOLDER PIN	1	STAINLESS STEEL	SOLDER NICKEL: 50U" MIN
3	SHELL HOUSING	1	High-TEMP. PLASTIC	BLACK
2	LIM	1	SILICA GEL	BLACK
1	MAIN HOUSING	1	High-TEMP. PLASTIC	BLACK

BILL OF MATERIAL

MARK	DESCRIPTION	DATE	REVISED	APPROVED
△X				
△X				
△X				

REVISIONS

UNSPECIFIED TOLERANCES	
ANGLAR	±5°
L≤ 4	±0.2
4<L≤ 16	±0.3
16<L≤ 63	±0.4
L> 63	±0.5

www.hiemi.cn

HIEMI TECHNOLOGY CO., LTD

DSND		SCALE: N/A
DWN		VIEW:
CHKD		UNIT: mm/in
APPD		SIZE: A4

USB 3.2 CF 24 PIN DOUBLE SMT
CH=0.40mm, BEVEL WATERPROOF CONNECTOR

PART NO.: 82224-612

DWG NO.: C-82224-612

WEIGHT	SHEET	REVISION
	1/1	A0

USB TYPE-C FULL-FEATURED RECEPTACLE INTERFACE PIN ASSIGNMENTS

PIN	Signal Name	Description	PIN	Signal Name	Description
A1	GND	Ground return	B12	GND	Ground return
A2	SSTXp1	Positive half of firs SuperSpeed TX differential pair	B11	SSRXp1	Positive half of firs SuperSpeed RX differential pair
A3	SSTXn1	Negative half of first SuperSpeed TX differential pair	B10	SSRXn1	Negative half of first SuperSpeed RX differential pair
A4	Vbus	Bus Power	B9	Vbus	Bus Power
A5	CC1	Configuration Channel	B8	SBU2	Sideband Use(SBU)
A6	Dp1	Positive half of the USB 2.0 differential pair-Position 1	B7	Dn2	Negative half of the USB 2.0 differential pair-Position 2
A7	Dn1	Negative half of the USB 2.0 differential pair-Position 1	B6	Dp2	Positive half of the USB 2.0 differential pair-Position 2
A8	SBU1	Sideband Use(SBU)	B5	CC2	Configuration Channel
A9	Vbus	Bus Power	B4	Vbus	Bus Power
A10	SSRXn2	Negative half of second SuperSpeed RX differential pair	B3	SSTXn2	Negative half of second SuperSpeed TX differential pair
A11	SSRXp2	Positive half of second SuperSpeed RX differential pair	B2	SSTXp2	Positive half of second SuperSpeed TX differential pair
A12	GND	Ground return	B1	GND	Ground return

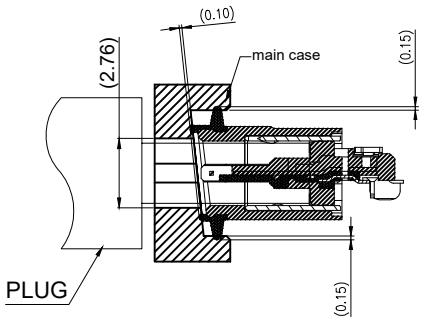

PANEL CUT-OUT REFERENCE

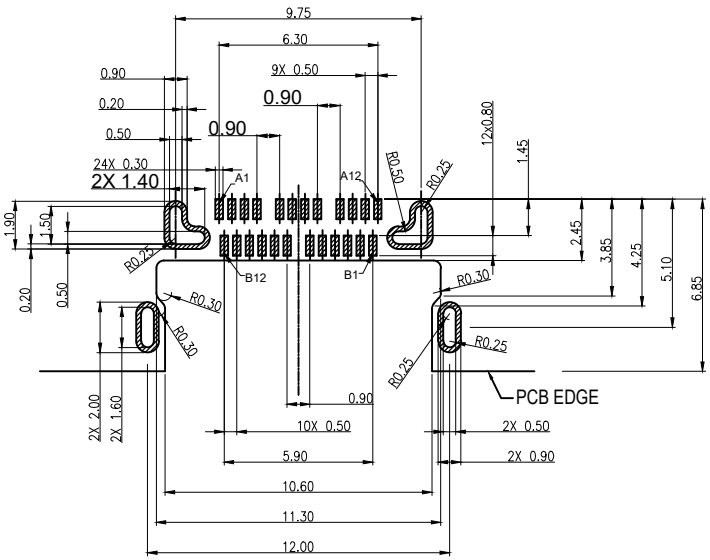

RECOMMENDED PCB LAYOUT

(Tolerance=±0.05)

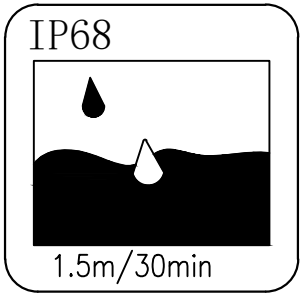

MARK	DESCRIPTION	DATE	REVISED	APPROVED
△X				
△X				
△X				

REVISIONS

UNSPECIFIED TOLERANCES	
ANGLAR	±5°
L≤ 4	±0.2
4<L≤ 16	±0.3
16<L≤ 63	±0.4
L> 63	±0.5

www.hiemi.cn

HIEMI TECHNOLOGY CO., LTD

DSND		SCALE: N/A
DWN		VIEW:
CHKD		UNIT: mm/in
APPD		SIZE: A4

USB 3.2 CF 24 PIN DOUBLE SMT CH=0.40mm, BEVEL WATERPROOF CONNECTOR

PART NO.: 82224-612

DWG NO.: C-82224-612

WEIGHT	SHEET	REVISION
	1/1	A0

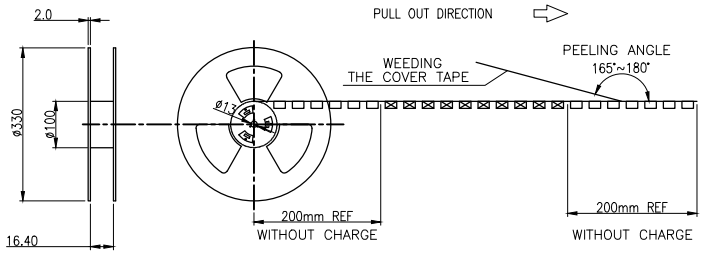

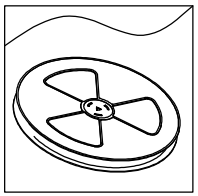

Vacuum Packing

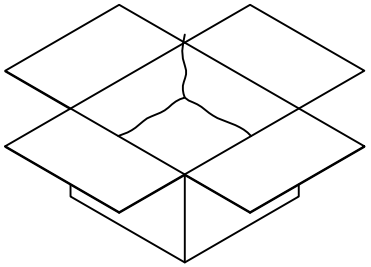

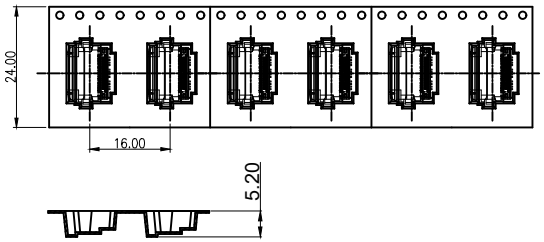

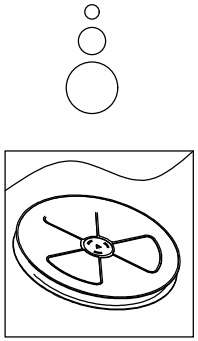

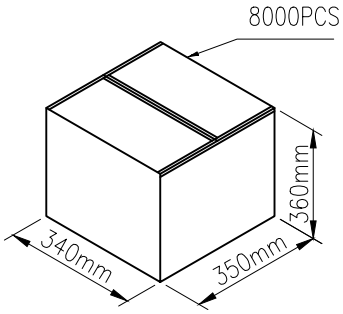

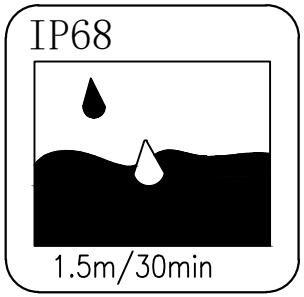

	REEL	CARTON
CONNECTOR (PCS)	800	8800

MARK	DESCRIPTION	DATE	REVISED	APPROVED
△X				
△X				
△X				

REVISIONS

UNSPECIFIED TOLERANCES	
ANGLAR	±5°
L≤ 4	±0.2
4<L≤ 16	±0.3
16<L≤ 63	±0.4
L> 63	±0.5

www.hiemi.cn

HIEMI TECHNOLOGY CO., LTD

DSND		SCALE: N/A
DWN		VIEW:
CHKD		UNIT: mm/in
APPD		SIZE: A4

USB 3.2 CF 24 PIN DOUBLE SMT CH=0.40mm, BEVEL WATERPROOF CONNECTOR

PART NO.: 82224-612

DWG NO.: C-82224-612

WEIGHT	SHEET	REVISION
	1/1	A0