

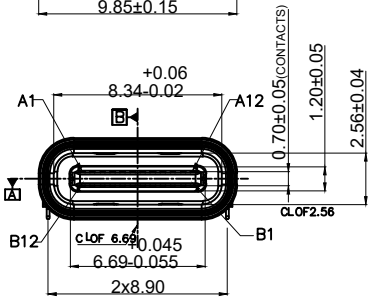

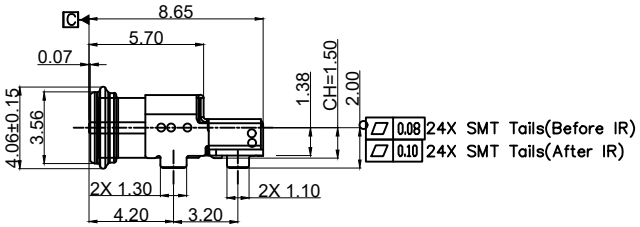

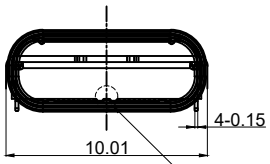

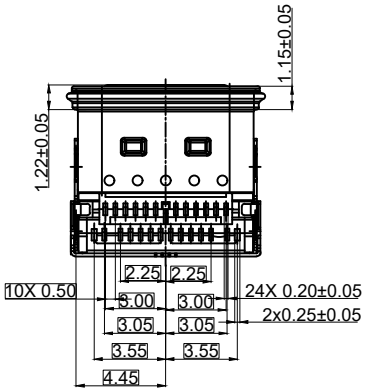

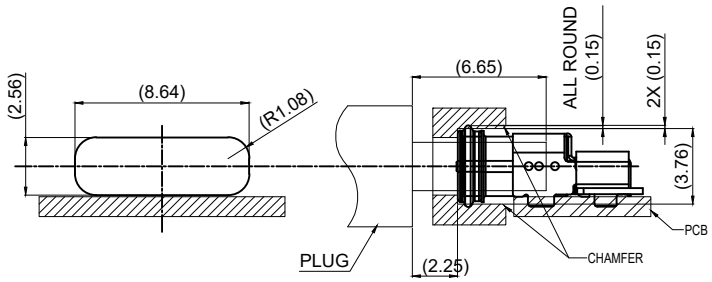

REF. PANEL DESIGN

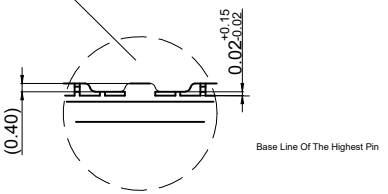

Detail H (Scale : 5:1)

REF. PANEL DESIGN

Pin No	Signal Name	Mating Sequence	Pin No	Signal Name	Mating Sequence
A1	GND	First	B12	GND	First
A2	TX1+	Second	B11	RX1+	Second
A3	TX1−	Second	B10	RX1−	Second
A4	VBUS	First	B9	VBUS	First
A5	CC1	Second	B8	SBU2	Second
A6	D+	Second	B7	D−	Second
A7	D−	Second	B6	D+	Second
A8	SBU1	Second	B5	CC2	Second
A9	VBUS	First	B4	VBUS	First
A10	RX2−	Second	B3	TX2−	Second
A11	RX2+	Second	B2	TX2+	Second
A12	GND	First	B1	GND	First
SHELL		GND	SHELL		GND

MARK	DESCRIPTION	DATE	REVISED	APPROVED
△X				
△X				
△X				

REVISIONS

ANGLAR	±5°
L≤ 4	±0.2
4<L≤ 16	±0.3
16<L≤ 63	±0.4
L> 63	±0.5

UNSPECIFIED TOLERANCES

www.hiemi.cn

HIEMI TECHNOLOGY CO., LTD

DSND		SCALE: N/A
DWN		VIEW:
CHKD		UNIT: mm/in
APPD		SIZE: A4

USB 3.1 C TYPE FEMALE TOP CONNECTOR CH1.5 WI.0.07

PART NO.: 82224-610

DWG NO.:

WEIGHT	SHEET	REVISION
	1/1	A0

NOTES/注释：

1. MATERIAL/材料：**SEE TABLE**/见下表
2. GENERAL SPECIFICATION/通用特性:
   - 2.1 COPLANARITY /共面度：**0.10 Max.**
   - 2.2 CURRENT RATING: 5A / 额定电流：5安培
   - 2.3 CONTACT RESISTANCE: 40mΩ MAX (INITIAL).
     INSULATION RESISTANCE:100MΩ **Min**
     接触电阻：40毫欧最大(初始值）/ 绝缘电阻：100MΩ Min
   - 2.4 DIELECTRIC WITHSTANDING VOLTAGE: 100 VAC
     耐电压： 100伏交流
   - 2.5 MECHANICAL CHARACTERISTICS:
     INSERTION FORCE: 5~20N EXTRACTION FORCE: 8~20N
     AFTER DURABILITY EXTRACTION FORCE: 6~20N
     力学特性：初始插入力：**5~20N** 拔出力：**8~20N**
     耐久后拔出力：**6~20N**
   - **2.6 DURABILITY: 10000 CYCLES /** 耐久性：10000次
   - **2.7 PACKAGING TYPE: CARRIER TAPE./** 包装类型：载带包装
3. WATERPROOF CLASS IPX8/防水等级 IPX8

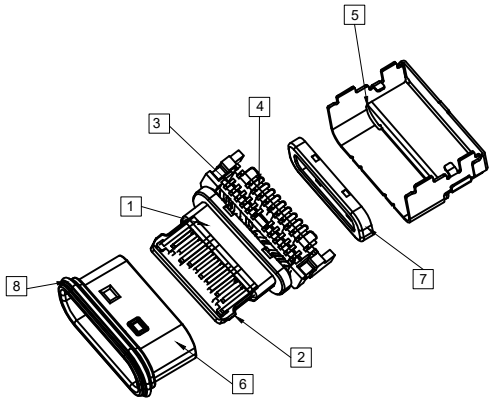

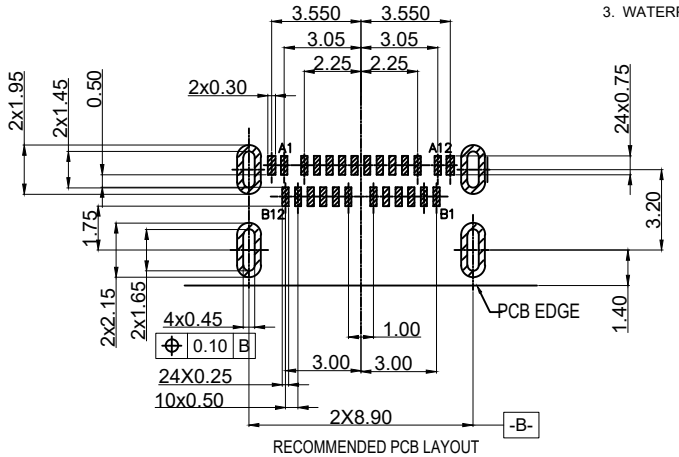

RECOMMENDED PCB LAYOUT
(Tolerance=±0.05)



项目	组成部件	用量	材质/处理	备注
9	密封圈	1PCS	硅胶，黑色	
8	胶水	1PCS	环氧胶，黑色	
7	外壳	1PCS	SUS304 , T=0.15. 镀镍50u" MIN.	
6	内拉伸壳	1PCS	SUS304, T=0.20.	
5	EMI拉伸壳	1PCS	SUS304 , T=0.12. 镀镍50u" MIN.	
4	上排端子	1SET	C18400, T=0.12. 底层镀镍 50-100u",功能接触区单面	
3	下排端子	1SET	刷镀 Au 3u",焊接区双面镀金 G/F.	
2	中板	1PCS	SUS301-1/4 H, 镀镍50u" MIN.	
1	塑胶	1PCS	PA46 BLACK	

MARK	DESCRIPTION	DATE	REVISED	APPROVED
△X				
△X				
△X				

REVISIONS

UNSPECIFIED TOLERANCES	
ANGLAR	±5°
L≤ 4	±0.2
4<L≤ 16	±0.3
16<L≤ 63	±0.4
L> 63	±0.5

www.hiemi.cn

HIEMI TECHNOLOGY CO., LTD

DSND		SCALE: N/A	USB 3.1 C TYPE FEMALE TOP CONNECTOR CH1.5 WI0.07
DWN		VIEW:	PART NO.: 82224-610
CHKD		UNIT: mm/in	DWG NO.:
APPD		SIZE: A4	

WEIGHT	SHEET	REVISION
	1/1	A0

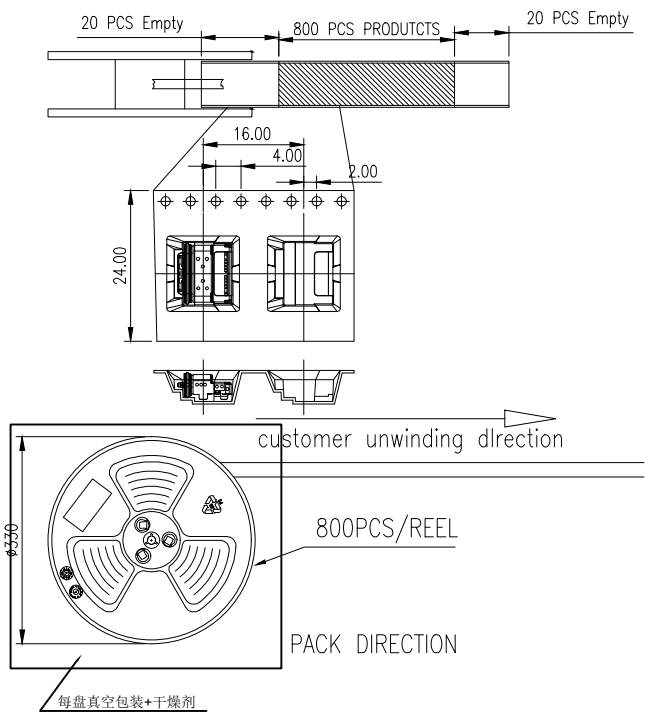

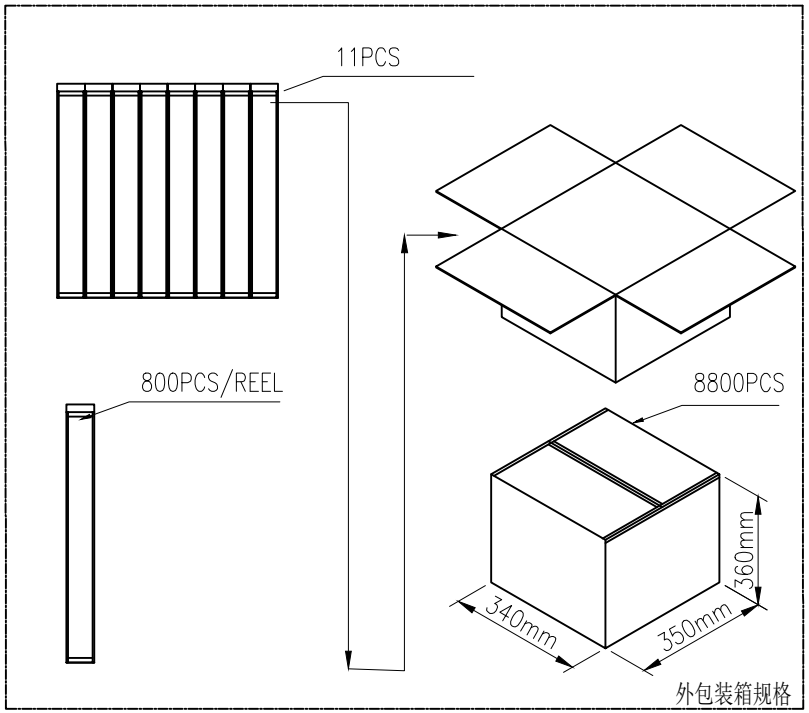

	REEL	CARTON
CONNECTOR (PCS)	800	8800

MARK	DESCRIPTION	DATE	REVISED	APPROVED
△X				
△X				
△X				

REVISIONS

UNSPECIFIED TOLERANCES	
ANGLAR	±5°
L≤ 4	±0.2
4<L≤ 16	±0.3
16<L≤ 63	±0.4
L> 63	±0.5

www.hiemi.cn

HIEMI TECHNOLOGY CO., LTD

DSND		SCALE: N/A	TYPE C/F 24PIN 防水IP68板上双贴 SMT
DWN		VIEW:	PART NO.: 82224-610
CHKD		UNIT: mm/in	DWG NO.:
APPD		SIZE: A4	

WEIGHT	SHEET	REVISION
	1/1	A0