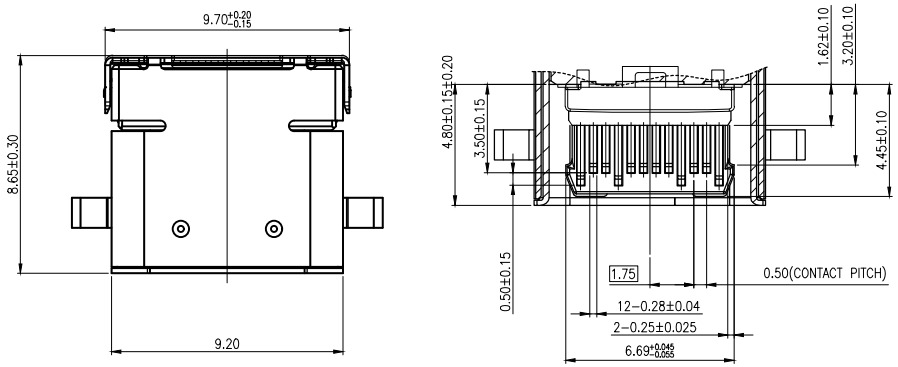

SECTION B-B

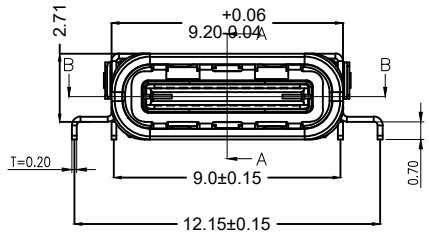

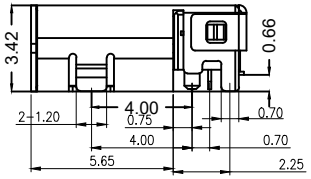

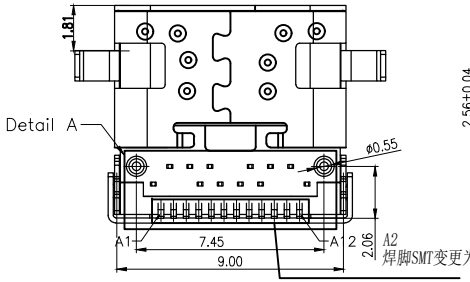

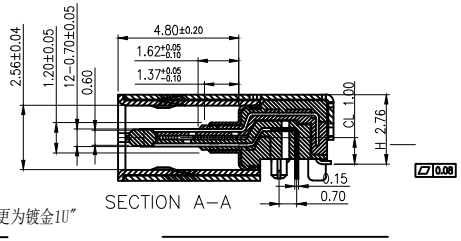

SECTION A-A

NOTE:
1. MATERIAL:
   1.1 INSULATOR: HIGH TEMPERATURE PLASTIC UL 94 V-0; Black Color
   1.2 CONTACT: C7025(T=0.12mm)
   1.3 SHELL:STAINLESS STEEL(T=0.20mm)
   1.4 COVER SHELL:STAINLESS STEEL(T=0.20mm)
   1.5 INNER GROUND COVER SHELL:STAINLESS STEEL(T=0.10mm)
   1.6 MID PLATE:STAINLESS STEEL(T=0.10mm)
2. ELECTRICAL CHARACTERISTICS;
   2.1 CONTACT RESISTANCE: 40mΩ Max FOR INITIAL. 10mΩ CHANGE AFTER TEST. MEASURE AT 20mV, 100mA.
   2.2 CONTACT CURRENT RATING: 5A FOR COLLECTIVELY POWER SUPPLY PIN(PINA1, A4, A9, A12, B1, B4, B9, B12); 1.25A FOR VCONN PIN; 0.25A FOR OTHER SIGNAL PIN.
   2.3 DIELECTRIC WITHSTANDING VOLTAGE: 100V AC R.M.S.
   2.4 INSULATION RESISTANCE 100MΩ Min
   2.5 OPERATING TEMPERATURE: -40° C ~ 85° C
3 MECHANICAL CHARACTERISTICS:
   3.1 MATING FORCE: 5~20 N.
   3.2 UNMATED FORCE: 8~20N INITIAL TEST; 6~20N DURABILITY AFTER TEST
   3.3 DURABILITY: 10,000 CYCLES
4. PLATING
   4.1 TERMINAL CONTACT: 3u"GOLD PLATING ON CONTACT AREA, ALL OVER 50u" Min NICKEL AND 1u"Min Matte GOLD ALL OVER 50u" Min NICKEL ON SOLDER AREA
   4.2 SHELL: 50u" Min. NICKEL ALL OVER,
   4.3 COVER SHELL: 80u" Min. NICKEL ALL OVER,
   4.4 INNER GROUND COVER SHELL: CLEAN
   4.5 MID PLATE: CLEAN

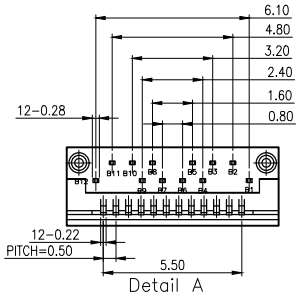

Detail A

MARK	DESCRIPTION	DATE	REVISED	APPROVED
△X				
△X				
△X				

REVISIONS

UNSPECIFIED TOLERANCES	
ANGLAR	±5°
L≤ 4	±0.2
4<L≤ 16	±0.3
16<L≤ 63	±0.4
L> 63	±0.5

www.hiemi.cn

HIEMI TECHNOLOGY CO., LTD

DSND		SCALE: N/A	
DWN		VIEW:	PART NO.:
CHKD		UNIT: mm/in	DWG NO.:
APPD		SIZE: A4	

WEIGHT	SHEET	REVISION
	1/1	A0

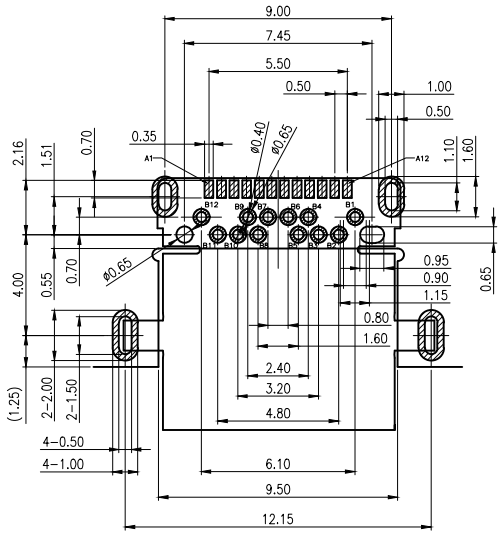

RECOMMEND P.C.B LAYOUT(COMPONENT SIDE)

TOLERANCE FOR PCB LAYOUT IS ± 0.05

KEEP OUT ARE

USB TYPE-C FULL-FEATURED RECEPTACLE INTERFACE PIN ASSIGNMENTS

PIN	Signal Name	Description	PIN	Signal Name	Description
A1	GND	Ground return	B12	GND	Ground return
A2	SSTXp1	Positive half of first SuperSpeed TX differential pair	B11	SSRXp1	Positive half of first SuperSpeed RX differential pair
A3	SSTXn1	Negative half of first SuperSpeed TX differential pair	B10	SSRXn1	Negative half of first SuperSpeed RX differential pair
A4	VBUS	Bus Power	B9	VBUS	Bus Power
A5	CC1	Configuration Channel	B8	SBU2	Sideband Use (SBU)
A6	Dp1	Positive half of the USB 2.0 differential pair-Position 1	B7	Dn2	Negative half of the USB 2.0 differential pair-Position 2
A7	Dn1	Negative half of the USB 2.0 differential pair-Position 1	B6	Dp2	Positive half of the USB 2.0 differential pair-Position 2
A8	SBU1	Sideband Use(SBU)	B5	CC2	Configuraation Channel
A9	VBUS	Bus Power	B4	VBUS	Bus Power
A10	SSRXn2	Negative half of second SuperSpeed RX differential pair	B3	SSTXn2	Negative half of second SuperSpeed TX differential pair
A11	SSRXp2	Positive half of second SuperSpeed RX differential pair	B2	SSTXp2	Positive half of second SuperSpeed TX differential pair
A12	GND	Ground return	B1	GND	Ground return

MARK	DESCRIPTION	DATE	REVISED	APPROVED
△X				
△X				
△X				

REVISIONS

ANGLAR	±5°
L≤ 4	±0.2
4<L≤ 16	±0.3
16<L≤ 63	±0.4
L> 63	±0.5

UNSPECIFIED TOLERANCES

www.hiemi.cn

HIEMI TECHNOLOGY CO., LTD

DSND		SCALE: N/A	
DWN		VIEW:	PART NO.:
CHKD		UNIT: mm/in	DWG NO.:
APPD		SIZE: A4	

WEIGHT	SHEET	REVISION
	1/1	A0

出料方向
PULL OUT DIRECTEON

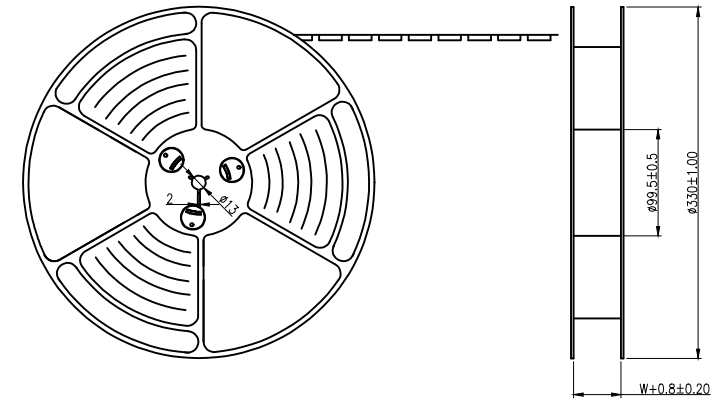

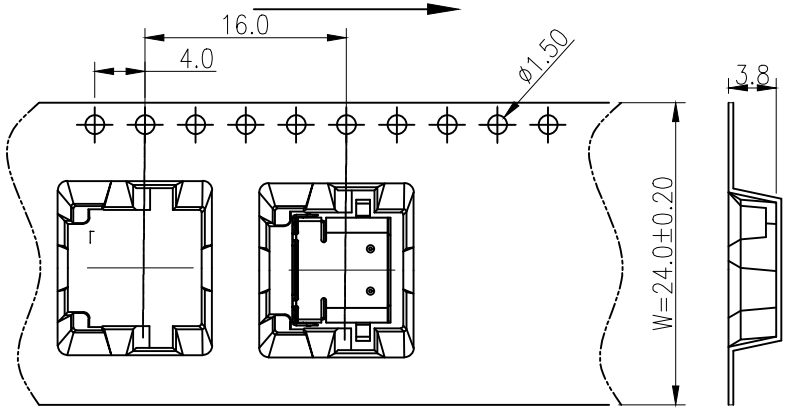

NOTES

1.帶子引導長度
LEAD TAPE LENGTH
出料方向
PULL OUT DIRECTEON

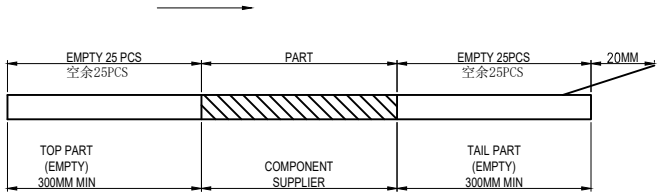

2.上帶 剝力力為：0.1~1.3N(10.2gf~130gf)
PEELING OFF FORCE OF TOP TAPE:0.1~1.3N(10.2gf~130gf)
出貨'運輸過程中一定注意：
THIS REQUIREMENT SHOULD BE APPLIED AT SHIPMENT:
卷帶在運輸過程中不能散開
PEELING OFF SHOULD NOT BE ALLOWED DURING TRANSPORTATION

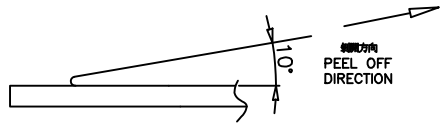

NOTE:
1.QUANTITY:1000 PCS/RELL,10000PCS/CARTON.

MARK	DESCRIPTION	DATE	REVISED	APPROVED
△X				
△X				
△X				

REVISIONS

UNSPECIFIED TOLERANCES	
ANGLAR	±5°
L≤ 4	±0.2
4<L≤ 16	±0.3
16<L≤ 63	±0.4
L> 63	±0.5

HIEMI TECHNOLOGY CO., LTD

DSND		SCALE: N/A	
DWN		VIEW:	PART NO.:
CHKD		UNIT: mm/in	DWG NO.:
APPD		SIZE: A4	

WEIGHT	SHEET	REVISION
	1/1	A0

www.hiemi.cn

出料方向

PULL OUT DIRECTEON

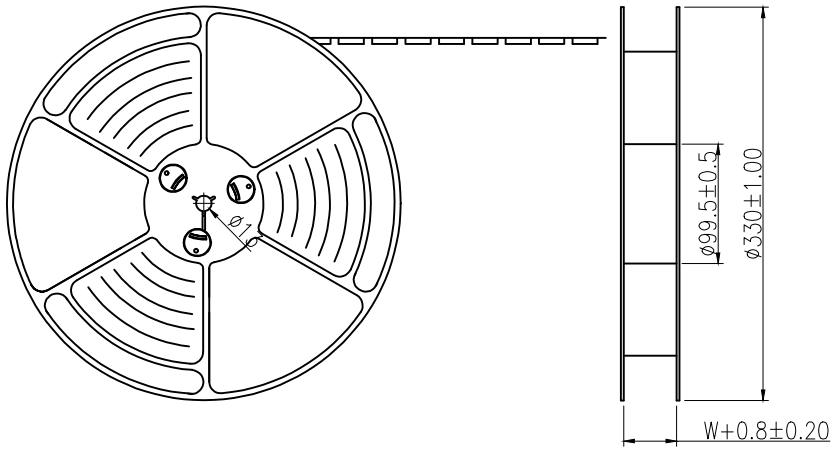

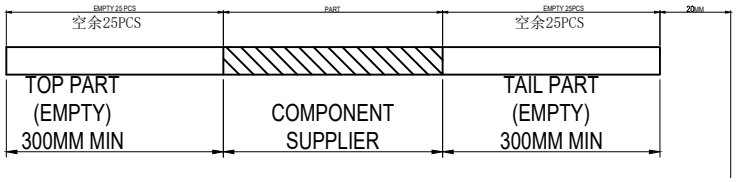

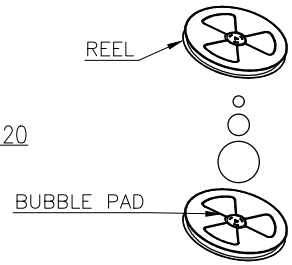

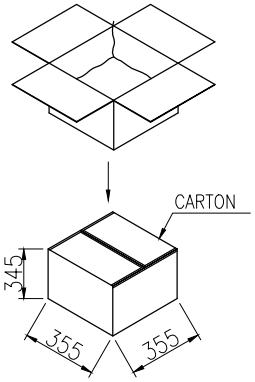

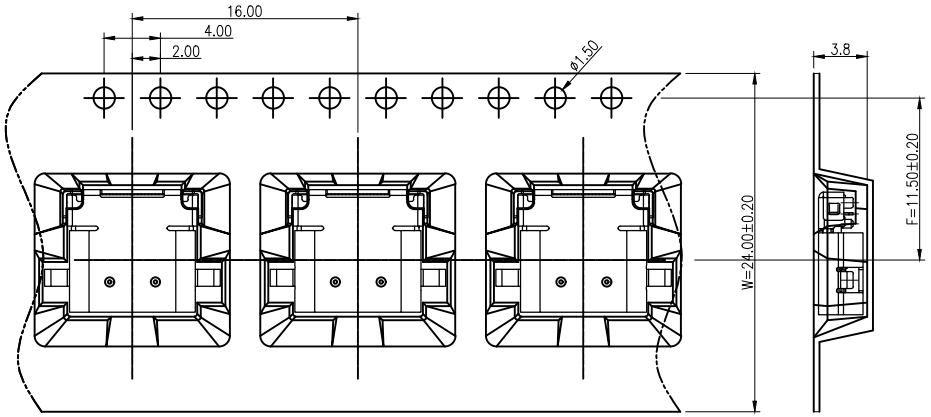

NOTE:

1.QUANTITY:1000 PCS/RELL,10000PCS/CARTON.

竖向包装规范

MARK	DESCRIPTION	DATE	REVISED	APPROVED
△X				
△X				
△X				

REVISIONS

www.hiemi.cn

ANGLAR	±5°
L≤ 4	±0.2
4<L≤ 16	±0.3
16<L≤ 63	±0.4
L> 63	±0.5

UNSPECIFIED TOLERANCES

HIEMI TECHNOLOGY CO., LTD

DSND		SCALE: N/A	TYPE C母座24PIN镀金3U"黑LCP沉板2.7 长8.65 双壳
DWN		VIEW:	PART NO.: 82224-273
CHKD		UNIT: mm/in	DWG NO.:
APPD		SIZE: A4	

WEIGHT	SHEET	REVISION
	1/1	A0