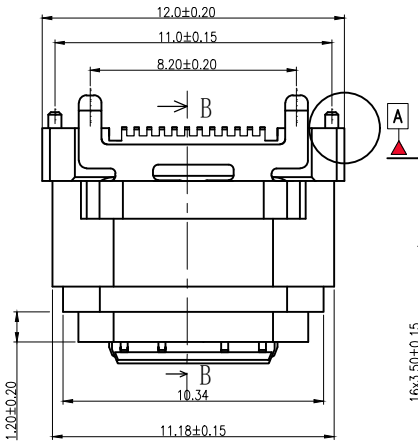

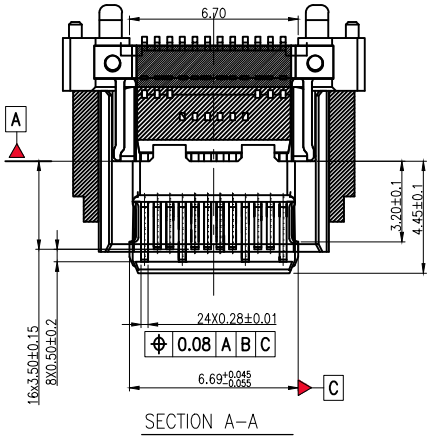

SECTION A–A

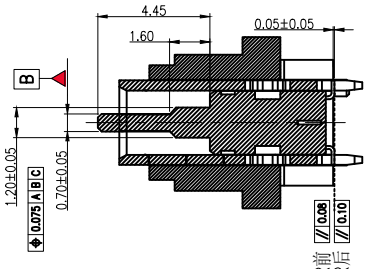

SECTION B–B

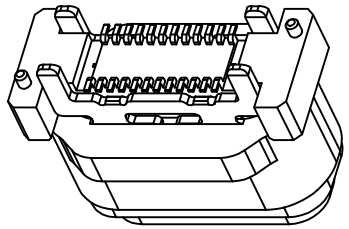

3D VIEW

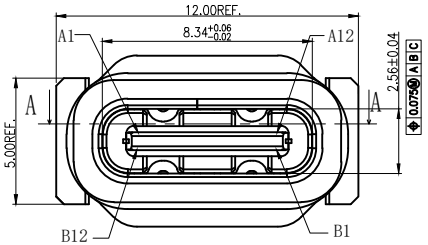

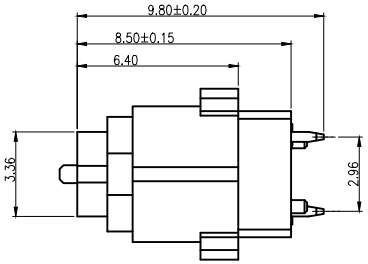

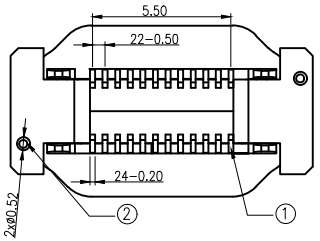

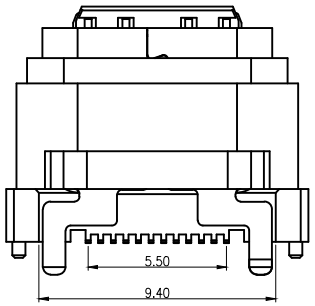



NOTE:
1. MATERIAL:
   1.1 INSULATOR: HIGH TEMPERATURE PLASTIC UL 94 V-0; Black Color
   1.2 CONTACT: C7025(T=0.12mm)
   1.3 SHELL:STAINLESS STEEL(T=0.40mm)
   1.4 MID PLATE:STAINLESS STEEL(T=0.15mm)
2. ELECTRICAL CHARACTERISTICS;
   2.1 CONTACT RESISTANCE: 40mΩ Max FOR INITIAL. 10mΩ CHANGE AFTER TEST. MEASURE AT 20mV, 100mA.
   2.2 CONTACT CURRENT RATING: 5A FOR COLLECTIVELY POWER SUPPLY PIN(PINA1, A4, A9, A12, B1, B4, B9, B12); 1.25A FOR VCONN PIN; 0.25A FOR OTHER SIGNAL PIN.
   2.3 DIELECTRIC WITHSTANDING VOLTAGE: 100V AC R.M.S.
   2.4 INSULATION RESISTANCE 100MΩ Min
   2.5 OPERATING TEMPERATURE: -40° C ~ 85° C
3 MECHANICAL CHARACTERISTICS:
   3.1 MATING FORCE: 5~20 N.
   3.2 UNMATED FORCE: 8~20N INITIAL TEST; 6~20N DURABILITY AFTER TEST
   3.3 DURABILITY: 10,000 CYCLES
4. PLATING
   4.1 TERMINAL CONTACT: Au 3u'' PLATING ON CANTACT AREA; TIN 60u'' Min TING ON SOLDER TAIL,NI 50u'' Min UNDERPLATING OVERALL
   4.2 SHELL: 50u" Min. NICKEL ALL OVER,
   4.3 MID PLATE: CLEAN

NO.	DESCRIPTION	MATERIAL	REMARKS	QTY	盐雾	PACKAGING
5	CAP	LCP 6007AS UL94V-0	BLACK	1PCS	48H	Reel
4	SHELL	SUS304 T=0.40mm	Ni 50u" Min Plated	1PCS		
3	LATCH	SUS301-H T=0.15mm	NO PLATED	1PCS		
2	CONTACT	C7025 T=0.12mm	Au 3u" PLATING ON CANTACT AREA; TIN 50u" Min TING ON SOLDER TAILNI 50u" Min UNDERPLATING OVERALL	1SET		
1	HOUSING	LCP UL94V-0	LCP BLACK UL94V-0	1PCS		

MARK	DESCRIPTION	DATE	REVISED	APPROVED
△X				
△X				
△X				

REVISIONS

UNSPECIFIED TOLERANCES	
ANGLAR	±5°
L≤ 4	±0.2
4<L≤ 16	±0.3
16<L≤ 63	±0.4
L> 63	±0.5

www.hiemi.cn

HIEMI TECHNOLOGY CO., LTD

DSND		SCALE: N/A	USB TYPE CF 24PIN直立式加宽8.5防水IPX8
DWN		VIEW:	PART NO.: 82224-116
CHKD		UNIT: mm/in	DWG NO.:
APPD		SIZE: A4	

WEIGHT	SHEET	REVISION
	1/1	A0

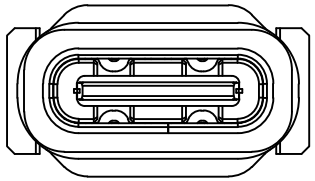

加防水圈示意图

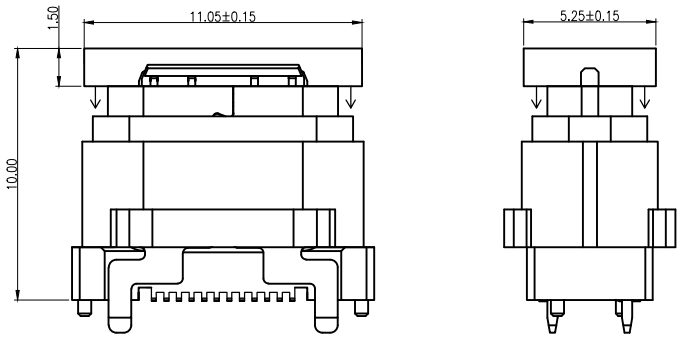

加CAP示意图

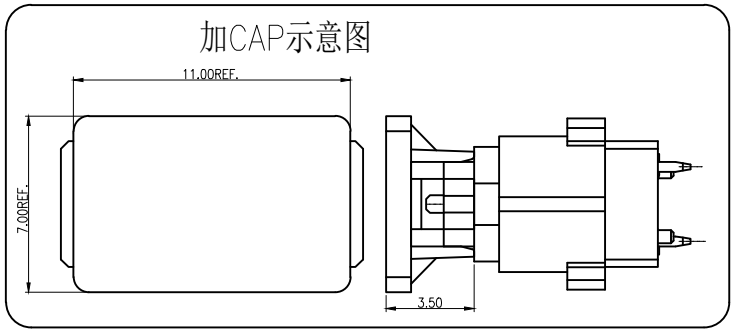

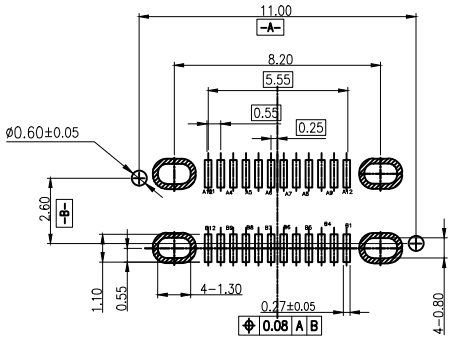

RECOMMENDED P.C.B. LAYOUT (T:1.00mm)

TOLERANCE UNSPECIFIED ±0.05mm

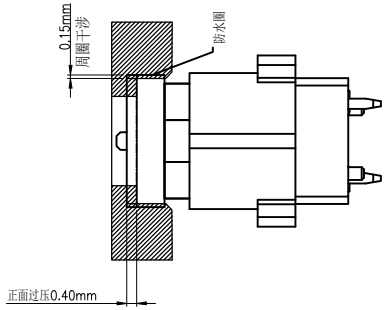

机构面板与防水圈参考干涉量

USB TYPE-C FULL-FEATURED RECEPTACLE INTERFACE PIN ASSIGNMENTS

PIN	Signal Name	Description	PIN	Signal Name	Description
A1	GND	Ground return	B12	GND	Ground return
A4	VBUS	Bus Power	B9	VBUS	Bus Power
A5	CC1	Configuration Channel	B8	SBU2	Sideband Use(SBU)
A6	Dp1	Positive half of the USB 2.0 differential pair-Position 1	B7	Dn2	Negative half of the USB 2.0 differential pair-Position 2
A7	Dn1	Negative half of the USB 2.0 differential pair-Position 1	B6	Dp2	Positive half of the USB 2.0 differential pair-Position 2
A8	SBU1	Sideband Use(SBU)	B5	CC2	Configuration Channel
A9	VBUS	Bus Power	B4	VBUS	Bus Power
A12	GND	Ground return	B1	GND	Ground return

MARK	DESCRIPTION	DATE	REVISED	APPROVED
△X				
△X				
△X				

REVISIONS

UNSPECIFIED TOLERANCES	
ANGLAR	±5°
L≤ 4	±0.2
4<L≤ 16	±0.3
16<L≤ 63	±0.4
L> 63	±0.5

www.hiemi.cn

HIEMI TECHNOLOGY CO., LTD

DSND		SCALE: N/A
DWN		VIEW:
CHKD		UNIT: mm/in
APPD		SIZE: A4

USB TYPE CF 24PIN直立式加宽8.5防水IPX8

PART NO.: 82224-116

DWG NO.:

WEIGHT	SHEET	REVISION
	1/1	A0

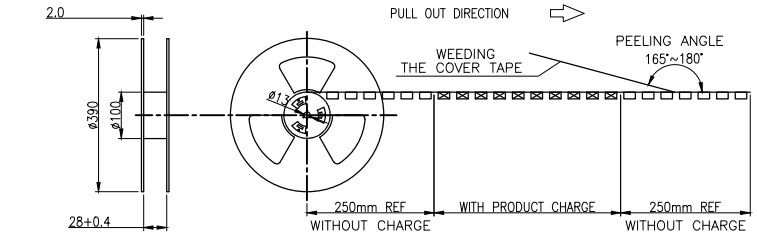

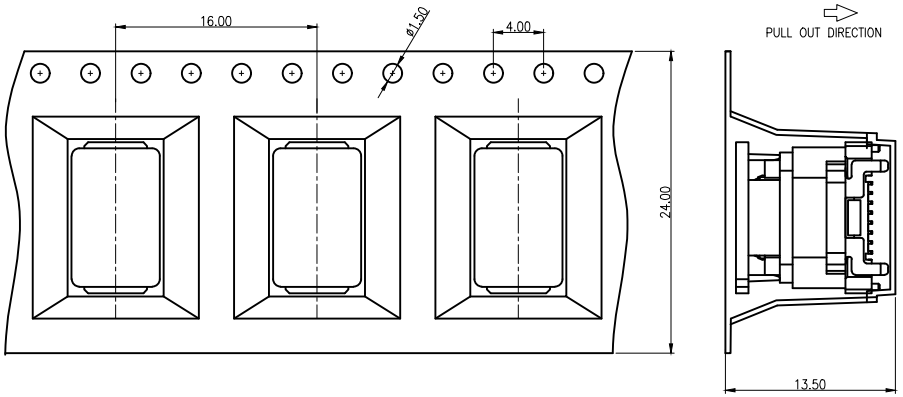

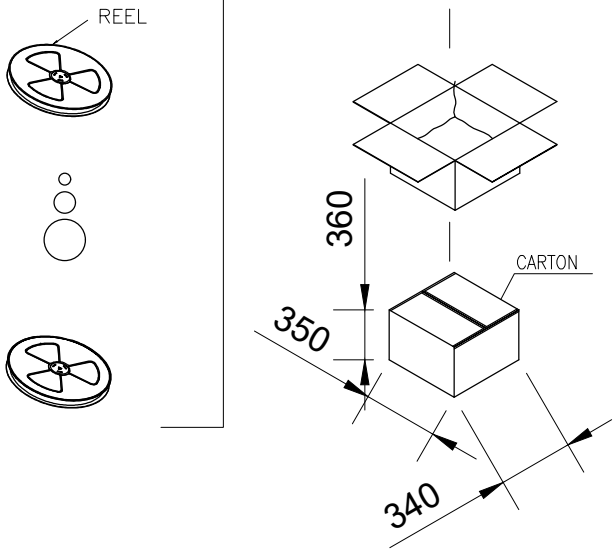

NOTE:
1.QUANTITY:300 PCS/RELL,3300PCS/CARTON.

注意:
1.材料:
纸箱:纤维板，瓦楞，双层壁。
胶带:聚苯乙烯，耐热温度:120℃，白。
卷筒:聚苯乙烯，耐热温度:70℃，蓝色。
包装:聚乙烯，耐热温度:100℃。
2.剥离强度:0.1 ~ 1.3 N(10 ~ 130克)
3.脱皮速度:300mm /min。
4.每个袋子都应包括干燥剂*2。
5.外箱上贴号物料标签及RHOS标签
6.同一产品只能装同一纸箱，不允其它产品;

MARK	DESCRIPTION	DATE	REVISED	APPROVED
△X				
△X				
△X				

REVISIONS

UNSPECIFIED TOLERANCES	
ANGLAR	±5°
L≤ 4	±0.2
4<L≤ 16	±0.3
16<L≤ 63	±0.4
L> 63	±0.5

www.hiemi.cn

HIEMI TECHNOLOGY CO., LTD

DSND		SCALE: N/A	TYPE-C 直立式加宽 成品出货包装规范
DWN		VIEW:	PART NO.:
CHKD		UNIT: mm/in	DWG NO.:
APPD		SIZE: A4	

WEIGHT	SHEET	REVISION
	1/1	A0

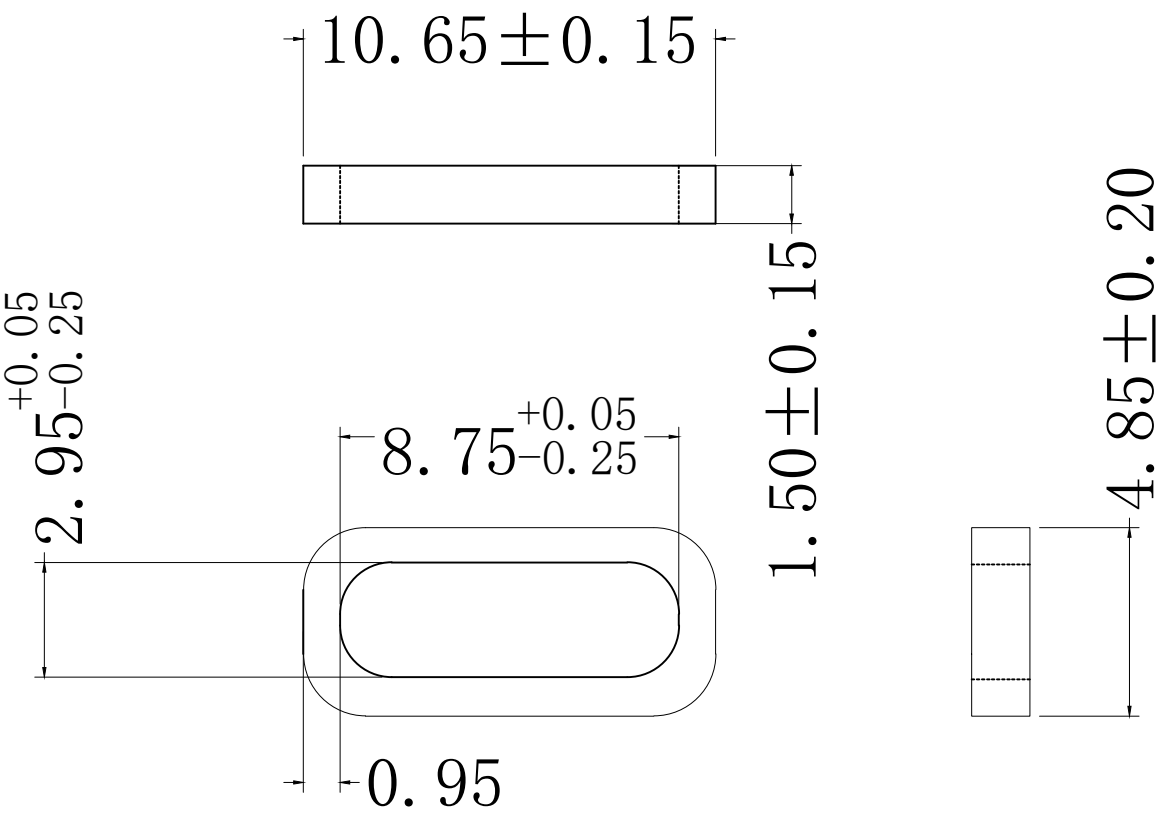

					ANGLAR	±5°
△X					L≤ 4	±0.2
△X					4<L≤ 16	±0.3
△X					16<L≤ 63	±0.4
MARK	DESCRIPTION	DATE	REVISED	APPROVED	L> 63	±0.5
REVISIONS					UNSPECIFIED TOLERANCES	

www.hiemi.cn

HIEMI TECHNOLOGY CO., LTD

DSND		SCALE: N/A	TYPE-C 6P/16P防水圈 方型
DWN		VIEW:	PART NO.: 72216-400
CHKD		UNIT: mm/in	DWG NO.:
APPD		SIZE: A4	

WEIGHT	SHEET	REVISION
	1/1	A0