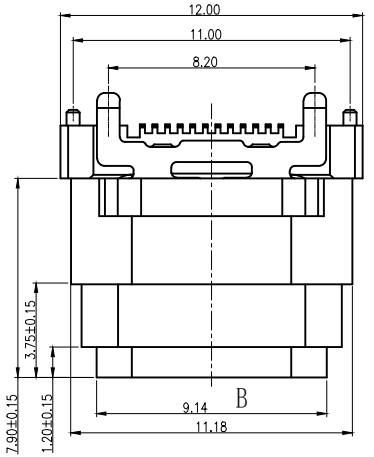

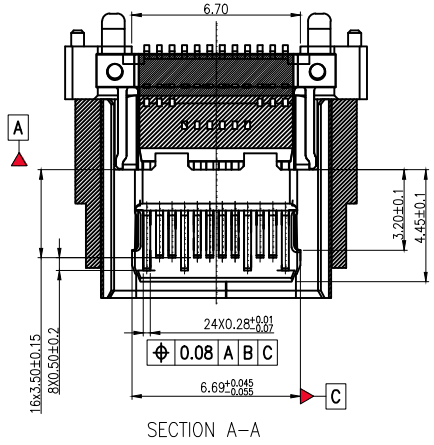

SECTION A-A

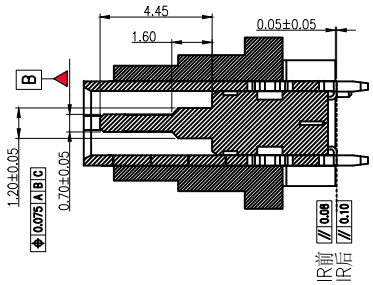

SECTION B-B

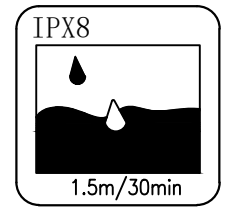

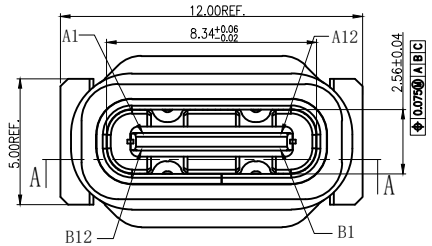

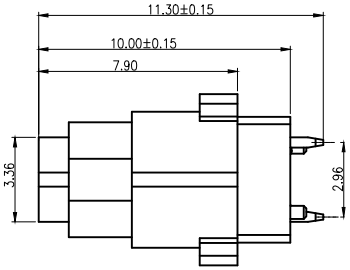

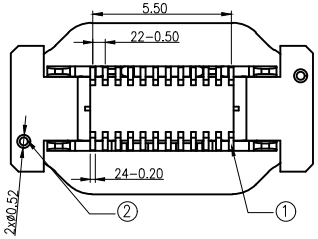

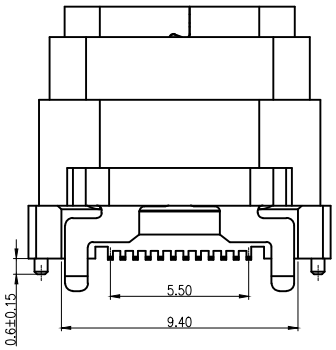

NOTE:
1. MATERIAL:
   1.1 INSULATOR: HIGH TEMPERATURE PLASTIC UL 94 V-0; Black Color
   1.2 CONTACT: C7025(T=0.12mm)
   1.3 SHELL:STAINLESS STEEL(T=0.40mm)
   1.4 MID PLATE:STAINLESS STEEL(T=0.15mm)
2. ELECTRICAL CHARACTERISTICS;
   2.1 CONTACT RESISTANCE: 40mΩ Max FOR INITIAL. 10mΩ CHANGE AFTER TEST. MEASURE AT 20mV, 100mA.
   2.2 CONTACT CURRENT RATING: 5A FOR COLLECTIVELY POWER SUPPLY PIN(PINA1,A4,A9,A12,B1,B4,B9,B12); 1.25A FOR VCONN PIN; 0.25A FOR OTHER SIGNAL PIN.
   2.3 DIELECTRIC WITHSTANDING VOLTAGE: 100V AC R.M.S.
   2.4 INSULATION RESISTANCE 100MΩ Min
   2.5 OPERATING TEMPERATURE: -40° C ~ 85° C
3 MECHANICAL CHARACTERISTICS:
   3.1 MATING FORCE: 5~20 N.
   3.2 UNMATED FORCE: 8~20N INITIAL TEST; 6~20N DURABILITY AFTER TEST
   3.3 DURABILITY: 10,000 CYCLES
4. PLATING
   4.1 TERMINAL CONTACT: Au 3u'' PLATING ON CANTACT AREA; 焊脚镀金G/F 镍底50u"min
   4.2 SHELL: 50u" Min. NICKEL ALL OVER,
   4.3 MID PLATE: CLEAN

NO.	DESCRIPTION	MATERIAL	REMARKS	QTY	盐雾	PACKAGING
5	CAP	LCP 6007AS UL94V-0	BLACK	1PCS	48H	Reel
4	SHELL	SUS304 T=0.40mm	Ni 50u" Min Plated	1PCS		
3	LATCH	SUS301-H T=0.15mm	NO PLATED	1PCS		
2	CONTACT	C7025 T=0.12mm	Au 3u" PLATING ON CANTACT AREA; TIN 50u" Min TING ON SOLDER TAIL,NI 50u" Min UNDERPLATING OVERALL	1SET		
1	HOUSING	LCP UL94V-0	LCP BLACK UL94V-0	1PCS		

MARK	DESCRIPTION	DATE	REVISED	APPROVED
△X				
△X				
△X				

REVISIONS

ANGLAR	±5°
L≤ 4	±0.2
4<L≤ 16	±0.3
16<L≤ 63	±0.4
L> 63	±0.5

UNSPECIFIED TOLERANCES

www.hiemi.cn

HIEMI TECHNOLOGY CO., LTD

DSND		SCALE: N/A
DWN		VIEW:
CHKD		UNIT: mm/in
APPD		SIZE: A4

TYPE CF 24PIN直立式加宽10.00 脚长1.3 防水IPX8

PART NO.: 82224-115

DWG NO.:

WEIGHT	SHEET	REVISION
	1/1	A0

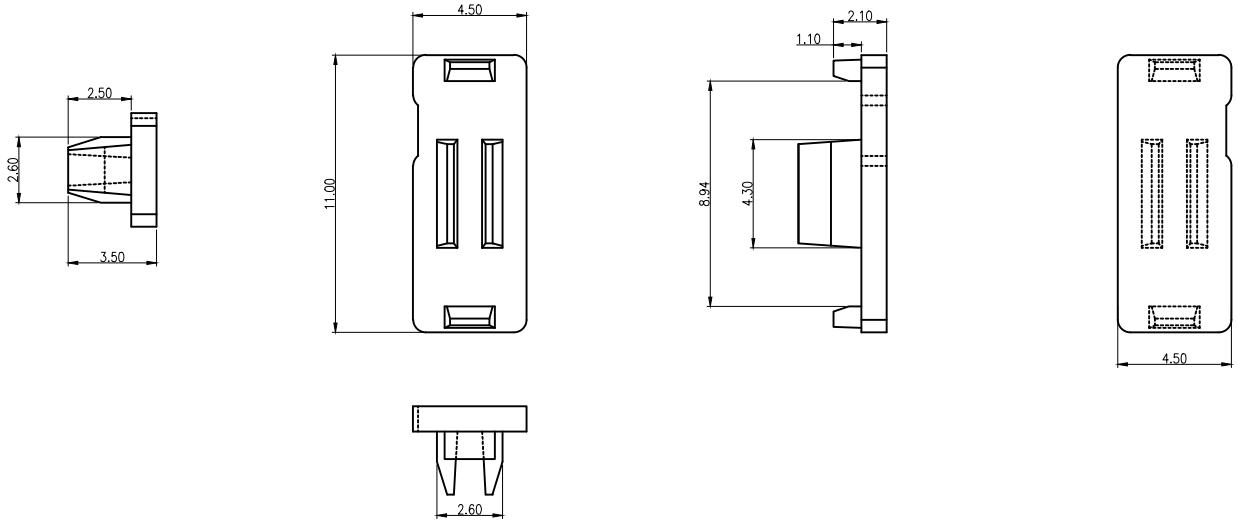

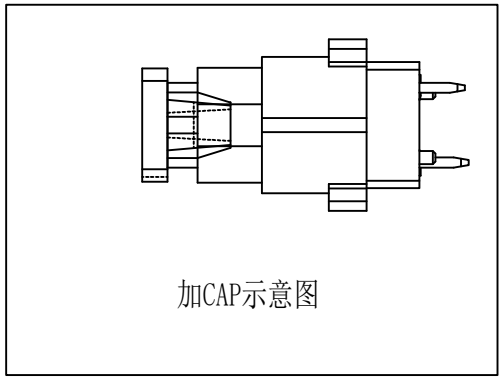

加CAP示意图

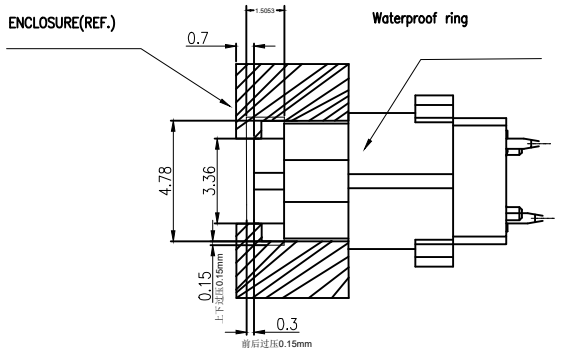

套防水圈示意图

MARK	DESCRIPTION	DATE	REVISED	APPROVED
△X				
△X				
△X				

REVISIONS

UNSPECIFIED TOLERANCES	
ANGLAR	±5°
L≤ 4	±0.2
4<L≤ 16	±0.3
16<L≤ 63	±0.4
L> 63	±0.5

www.hiemi.cn

HIEMI TECHNOLOGY CO., LTD

DSND		SCALE: N/A
DWN		VIEW:
CHKD		UNIT: mm/in
APPD		SIZE: A4

USB TYPE CF 24PIN直立式加宽10.00后塞

PART NO.: 82224-115

DWG NO.:

WEIGHT	SHEET	REVISION
	1/1	A0

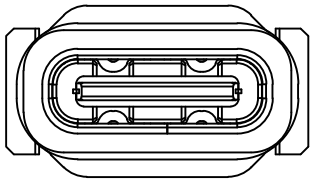

加防水圈示意图

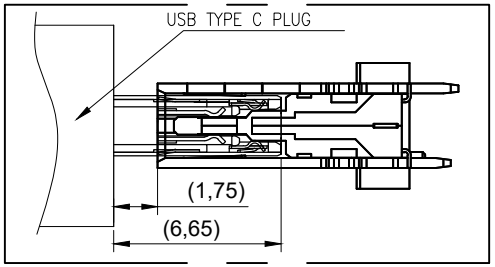

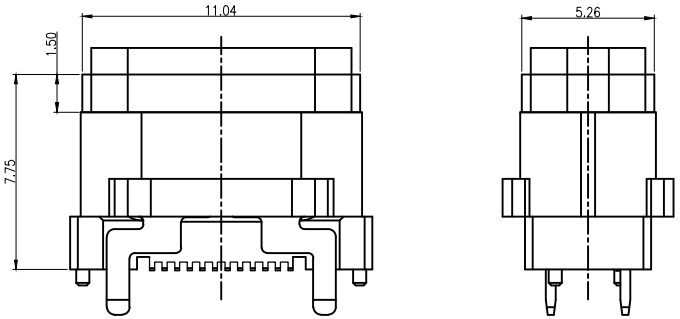

USB TYPE-C FULL-FEATURED RECEPTACLE INTERFACE PIN ASSIGNMENTS

PIN	Signal Name	Description	PIN	Signal Name	Description
A1	GND	Ground return	B12	GND	Ground return
A2	SSTXp1	Positive half of first SuperSpeed TX differential pair	B11	SSRXp1	Positive half of first SuperSpeed RX differential pair
A3	SSTXn1	Negative half of first SuperSpeed TX differential pair	B10	SSRXn1	Negative half of first SuperSpeed RX differential pair
A4	VBUS	Bus Power	B9	VBUS	Bus Power
A5	CC1	Configuration Channel	B8	SBU2	Sideband Use (SBU)
A6	Dp1	Positive half of the USB 2.0 differential pair-Position 1	B7	Dn2	Negative half of the USB 2.0 differential pair-Position 2
A7	Dn1	Negative half of the USB 2.0 differential pair-Position 1	B6	Dp2	Positive half of the USB 2.0 differential pair-Position 2
A8	SBU1	Sideband Use(SBU)	B5	CC2	Configuraation Channel
A9	VBUS	Bus Power	B4	VBUS	Bus Power
A10	SSRXn2	Negative half of second SuperSpeed RX differential pair	B3	SSTXn2	Negative half of second SuperSpeed TX differential pair
A11	SSRXp2	Positive half of second SuperSpeed RX differential pair	B2	SSTXp2	Positive half of second SuperSpeed TX differential pair
A12	GND	Ground return	B1	GND	Ground return

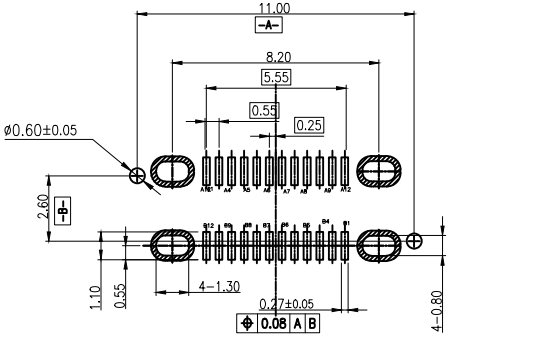

RECOMMENDED P.C.B. LAYOUT (T:1.00mm)

TOLERANCE UNSPECIFIED ±0.05mm

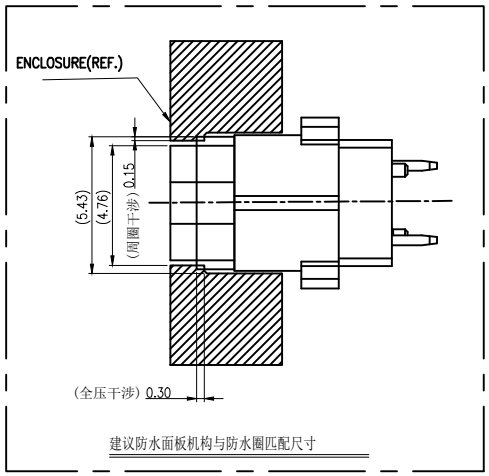

建议防水面板机构与防水圈匹配尺寸

MARK	DESCRIPTION	DATE	REVISED	APPROVED
△X				
△X				
△X				

REVISIONS

UNSPECIFIED TOLERANCES	
ANGLAR	±5°
L≤ 4	±0.2
4<L≤ 16	±0.3
16<L≤ 63	±0.4
L> 63	±0.5

www.hiemi.cn

HIEMI TECHNOLOGY CO., LTD

DSND		SCALE: N/A	TYPE CF 24PIN直立式加宽10.00脚长1.3 防水IPX8
DWN		VIEW:	PART NO.: SEE TABLE
CHKD		UNIT: mm/in	DWG NO.:
APPD		SIZE: A4	

WEIGHT	SHEET	REVISION
	1/1	A0

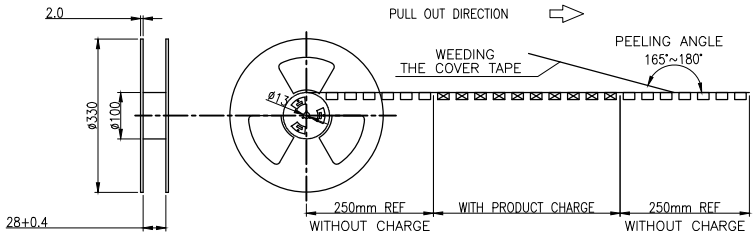

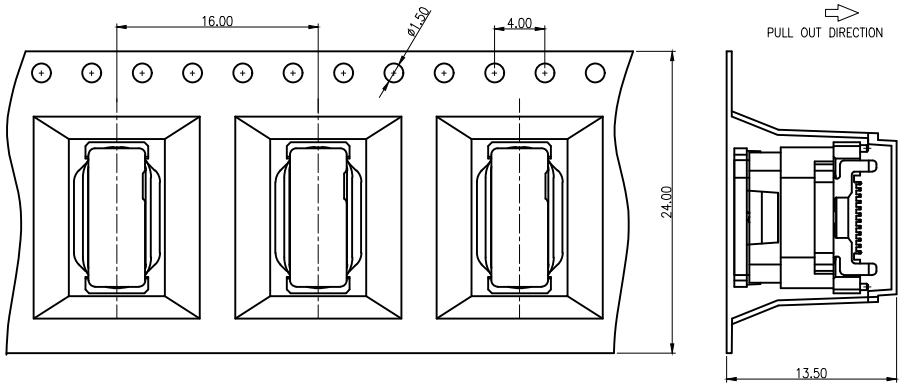

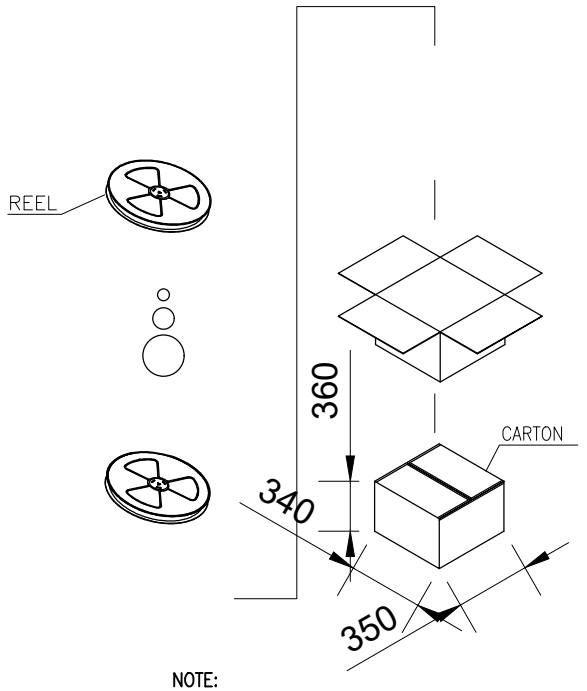

NOTE:
1.QUANTITY:300 PCS/RELL,3300PCS/CARTON.

注意:
1.材料:
纸箱:纤维板，瓦楞，双层壁。
胶带:聚苯乙烯，耐热温度:120℃，白。
卷筒:聚苯乙烯，耐热温度:70℃，蓝色。
包装:聚乙烯，耐热温度:100℃。
2.剥离强度:0.1 ~ 1.3 N(10 ~ 130克)
3.脱皮速度:300mm /min。
4.每盘都应真空包装包括干燥剂*2。
5.外箱上贴号物料标签及RHOS标签
6.同一产品只能装同一纸箱，不允其它产品;

300	11	3300 PCS
PCS/卷	卷/箱	箱

MARK	DESCRIPTION	DATE	REVISED	APPROVED
△X				
△X				
△X				

REVISIONS

UNSPECIFIED TOLERANCES	
ANGLAR	±5°
L≤ 4	±0.2
4<L≤ 16	±0.3
16<L≤ 63	±0.4
L> 63	±0.5

www.hiemi.cn

HIEMI TECHNOLOGY CO., LTD

DSND		SCALE: N/A
DWN		VIEW:
CHKD		UNIT: mm/in
APPD		SIZE: A4

TYPE-C 直立式加宽
成品出货包装规范

PART NO.: 82224-115
DWG NO.:

WEIGHT	SHEET	REVISION
	1/1	A0