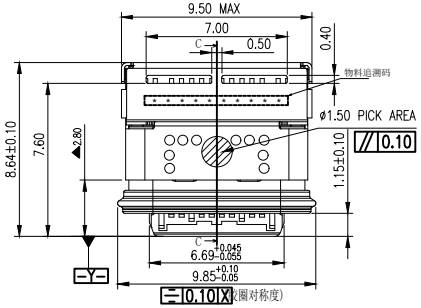

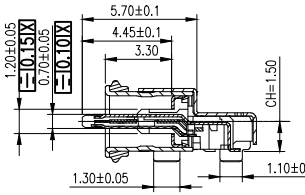

SECTION C-C(SC 1:1)

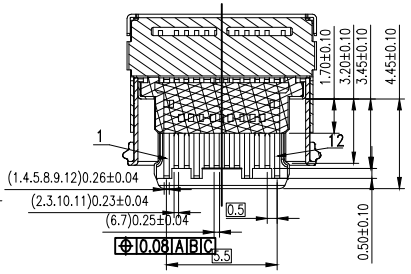

SECTION B-B(SC 1:1)

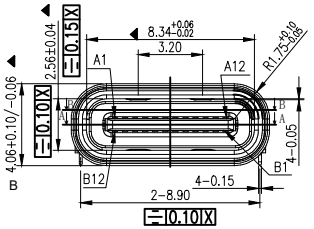

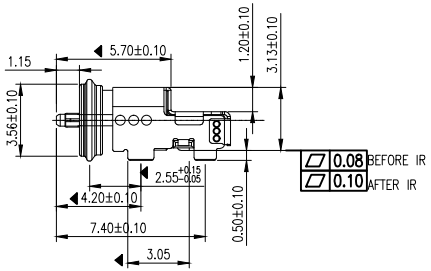

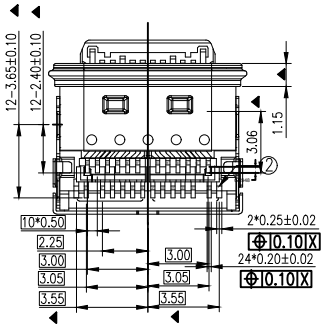

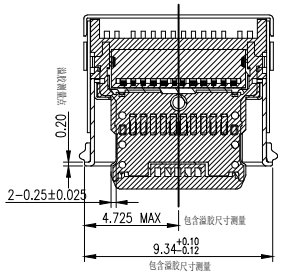

SECTION A-A(SC 1:1)



1. ELECTRICAL CHARACTERISTICS:
   1.1 CONTACT RESISTANCE: 40mΩ Max FOR INITIAL. 10mΩ CHANGE AFTER TEST. MEASURE AT 20mV, 100mA.
   1.2 CONTACT CURRENT RATING: 6A FOR COLLECTIVELY POWER SUPPLY PIN(PINA1, A4, A9, A12, B1, B4, B9, B12); 1.25A FOR VCONN PIN; 0.25A FOR OTHER SIGNAL PIN.
   1.3 DIELECTRIC WITHSTANDING VOLTAGE: 100V AC R.M.S.
   1.4 INSULATION RESISTANCE 100MΩ Min
   1.5 OPERATING TEMPERATURE: -40° C ~ 85° C
2 MECHANICAL CHARACTERISTICS:
   2.1 MATING FORCE: 5~20 N.
   2.2 UNMATED FORCE: 8~20N INITIAL TEST; 6~20N DURABILITY AFTER TEST
   2.3 DURABILITY: 10,000 CYCLES

USB TYPE-C FULL-FEATURED RECEPTACLE INTERFACE PIN ASSIGNMENTS

PIN	Signal Name	Description	PIN	Signal Name	Description
A1	GND	Ground return	B12	GND	Ground return
A2	SSTXp1	Positive half of first SuperSpeed TX differential pair	B11	SSRXp1	Positive half of first SuperSpeed RX differential pair
A3	SSTXn1	Negative half of first SuperSpeed TX differential pair	B10	SSRXn1	Negative half of first SuperSpeed RX differential pair
A4	VBUS	Bus Power	B9	VBUS	Bus Power
A5	CC1	Configuration Channel	B8	SBU2	Sideband Use (SBU)
A6	Dp1	Positive half of the USB 2.0 differential pair-Position 1	B7	Dn2	Negative half of the USB 2.0 differential pair-Position 2
A7	Dn1	Negative half of the USB 2.0 differential pair-Position 1	B6	Dp2	Positive half of the USB 2.0 differential pair-Position 2
A8	SBU1	Sideband Use(SBU)	B5	CC2	Configuraation Channel
A9	VBUS	Bus Power	B4	VBUS	Bus Power
A10	SSRXn2	Negative half of second SuperSpeed RX differential pair	B3	SSTXn2	Negative half of second SuperSpeed TX differential pair
A11	SSRXp2	Positive half of second SuperSpeed RX differential pair	B2	SSTXp2	Positive half of second SuperSpeed TX differential pair
A12	GND	Ground return	B1	GND	Ground return

MARK	DESCRIPTION	DATE	REVISED	APPROVED
△X				
△X				
△X				

REVISIONS

UNSPECIFIED TOLERANCES	
ANGLAR	±5°
L≤ 4	±0.2
4<L≤ 16	±0.3
16<L≤ 63	±0.4
L> 63	±0.5

www.hiemi.cn

HIEMI TECHNOLOGY CO., LTD

DSND		SCALE: N/A
DWN		VIEW:
CHKD		UNIT: mm/in
APPD		SIZE: A4

TYPE C/F 24PIN 防水
IP68板上双贴 SMT

PART NO.: 82224-091

DWG NO.:

WEIGHT	SHEET	REVISION
	1/1	A0

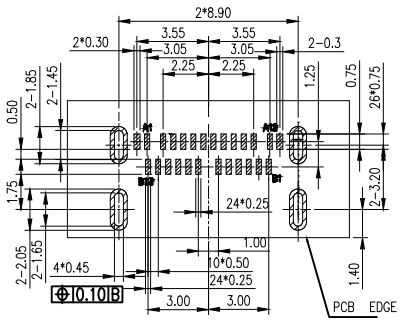

RECOMMENDED PCB LAYOUT
(Tolerance=±0.05)

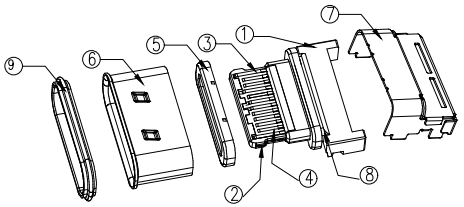

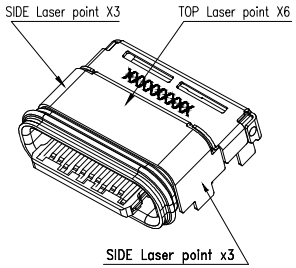



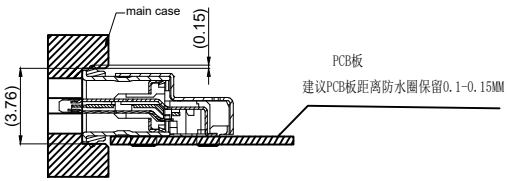

SECTION A-A
PANEL CUT-OUT REFERENCE

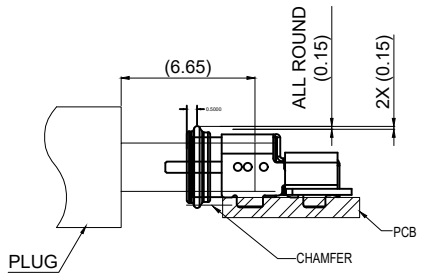

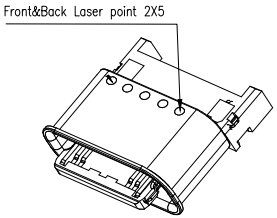

说明:

1. Colplanarity: 0。08最大红外线前。, 0。10mm MAX
2. 舌PIN的位置:IR前 : 0.08mm MAX; IR 后0.12mm MAX;
3. 防水圈：黑色液态硅胶成型，硬度60±10 HV
   耐温260℃/MAX，毛边0.10mm/MAX
4. 包装方式 : 载带包装,真空包装，纸盒内包装
5. 接触区和焊接区无毛刺，除特说明，冲压毛刺为0.05mm MAX。
6. 成品气密性及电性必须100%检测
7. 成品端子平面度必须100%检测。
8. 成品可靠性测试要求参照规格书。
9. 产品满足 ROHS 2.0
10. 产品组装外壳型腔过压示意图如左图

项目	组成部件	用量	材质/处理	备注
9	密封圈	1PCS	硅胶，黑色	
8	胶水	1PCS	环氧胶，黑色	
7	外壳	1PCS	SUS304 ,T=0.15.镀镍50u″ MIN.	
6	内拉伸壳	1PCS	SUS304,T=0.20.	
5	EMI拉伸壳	1PCS	SUS304 ,T=0.12.镀镍30u″ MIN.	
4	上排端子	1SET	C18400,T=0.12.底层镀镍 50-100u″,功能接触区单面刷镀 Au 15u″,焊接区双面镀金 G/F.	
3	下排端子	1SET		
2	中板	1PCS	SUS301-1/4 H，镀镍50u″ MIN.	
1	塑胶	1PCS	PA46 BLACK	

MARK	DESCRIPTION	DATE	REVISED	APPROVED
△X				
△X				
△X				

REVISIONS

UNSPECIFIED TOLERANCES	
ANGLAR	±5°
L≤ 4	±0.2
4<L≤ 16	±0.3
16<L≤ 63	±0.4
L> 63	±0.5

www.hiemi.cn

HIEMI TECHNOLOGY CO., LTD

DSND		SCALE: N/A	TYPE C/F 24PIN 防水IP68 板上双贴 SMT
DWN		VIEW:	PART NO.: 82224-091
CHKD		UNIT: mm/in	DWG NO.:
APPD		SIZE: A4	

WEIGHT	SHEET	REVISION
	1/1	A0

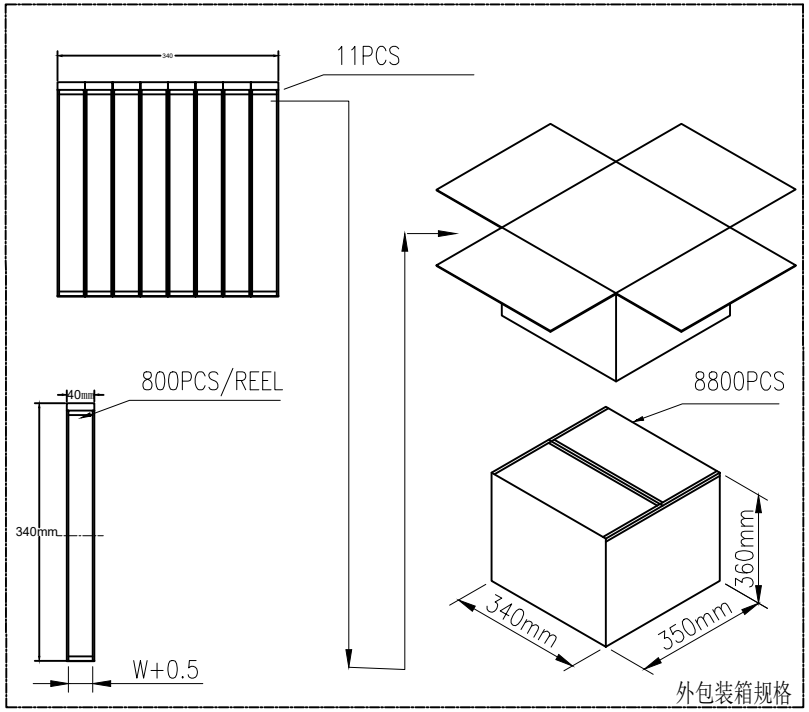

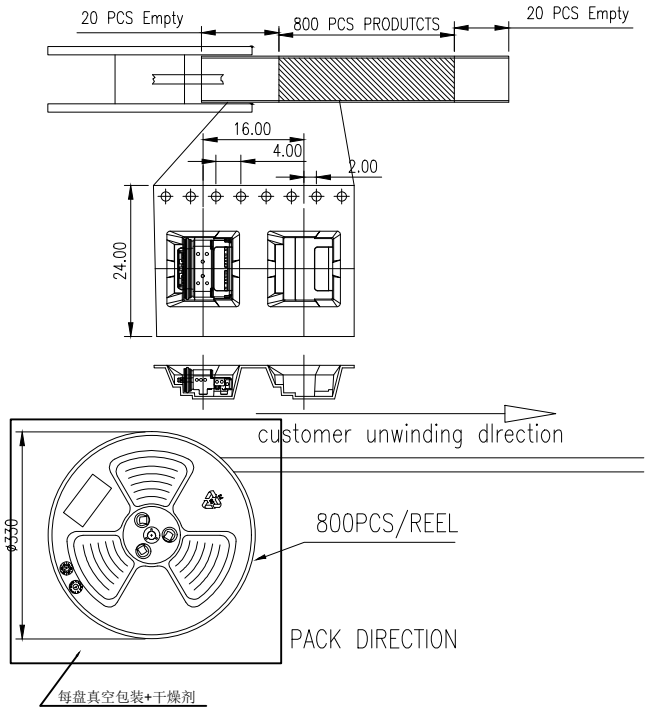

	REEL	CARTON
CONNECTOR (PCS)	800	8800

MARK	DESCRIPTION	DATE	REVISED	APPROVED
△X				
△X				
△X				

REVISIONS

UNSPECIFIED TOLERANCES	
ANGLAR	±5°
L≤ 4	±0.2
4<L≤ 16	±0.3
16<L≤ 63	±0.4
L> 63	±0.5

www.hiemi.cn

HIEMI TECHNOLOGY CO., LTD

DSND		SCALE: N/A
DWN		VIEW:
CHKD		UNIT: mm/in
APPD		SIZE: A4

TYPE C/F 24PIN 防水IP68
板上双贴 SMT

PART NO.: 82224-091

DWG NO.:

WEIGHT	SHEET	REVISION
	1/1	A0

包规变更后

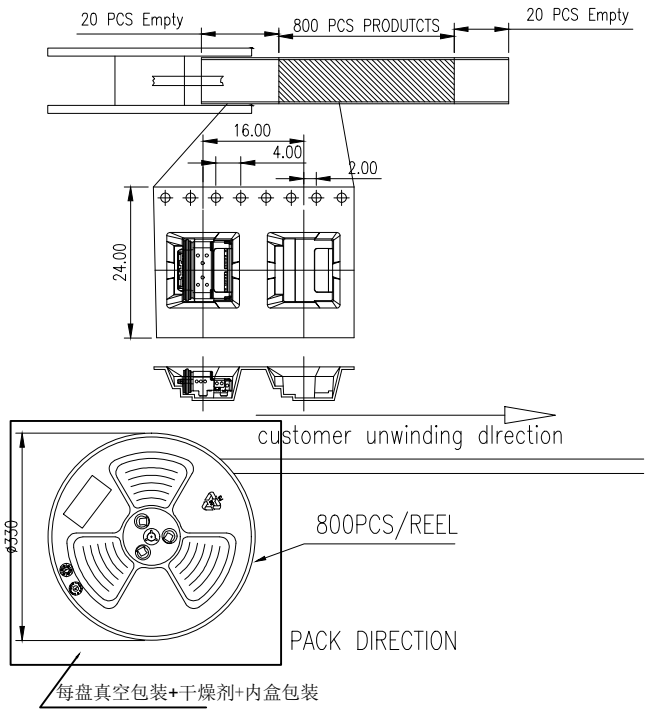

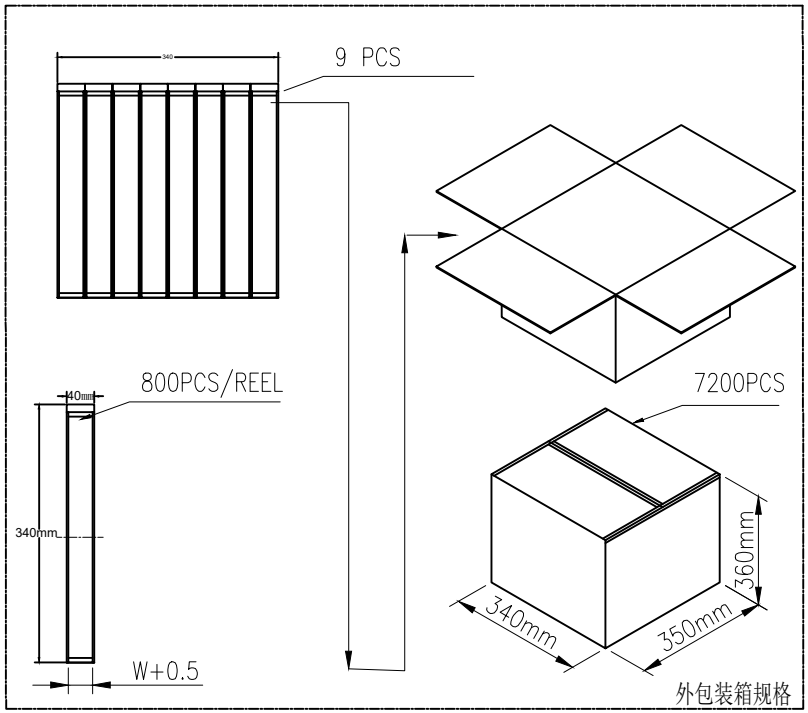

	REEL	CARTON
CONNECTOR (PCS)	800	7200PCS

MARK	DESCRIPTION	DATE	REVISED	APPROVED
△X				
△X				
△X				

REVISIONS

ANGLAR	±5°
L≤ 4	±0.2
4<L≤ 16	±0.3
16<L≤ 63	±0.4
L> 63	±0.5

UNSPECIFIED TOLERANCES

www.hiemi.cn

HIEMI TECHNOLOGY CO., LTD

DSND		SCALE: N/A
DWN		VIEW:
CHKD		UNIT: mm/in
APPD		SIZE: A4

TYPE C/F 24PIN 防水IP68
板上双贴 SMT

PART NO.: 82224-091

DWG NO.:

WEIGHT	SHEET	REVISION
	1/1	A0