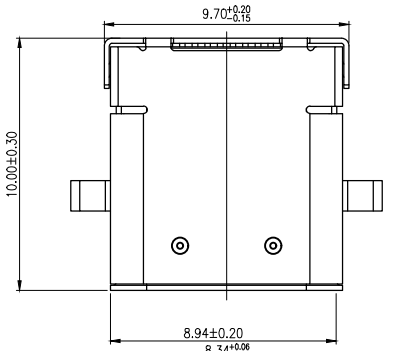

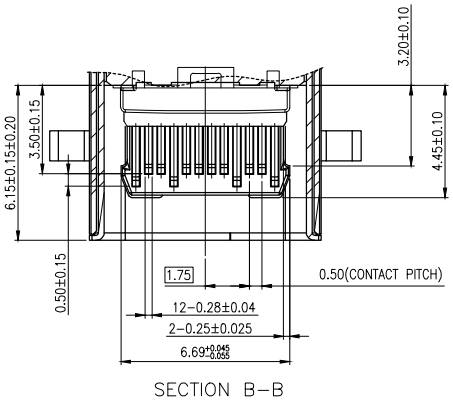

SECTION B−B

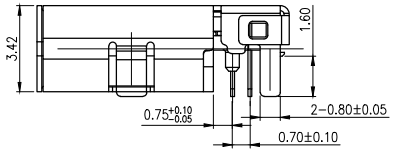

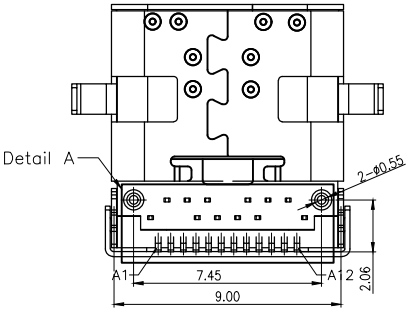

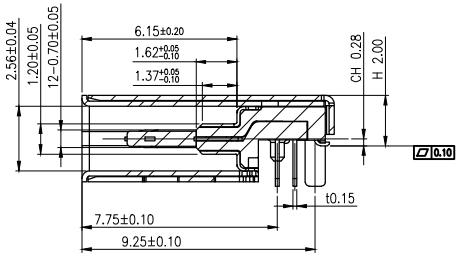

SECTION A−A

NOTE:
1. MATERIAL:
   1.1 INSULATOR: HIGH TEMPERATURE PLASTIC UL 94 V-0; Black Color
   1.2 CONTACT: C7025(T=0.12mm)
   1.3 SHELL:STAINLESS STEEL(T=0.20mm)
   1.4 COVER SHELL:STAINLESS STEEL(T=0.20mm)
   1.5 INNER GROUND COVER SHELL:STAINLESS STEEL(T=0.10mm)
   1.6 MID PLATE:STAINLESS STEEL(T=0.10mm)
2. ELECTRICAL CHARACTERISTICS;
   2.1 CONTACT RESISTANCE: 40mΩ Max FOR INITIAL. 10mΩ CHANGE AFTER TEST. MEASURE AT 20mV, 100mA.
   2.2 CONTACT CURRENT RATING: 5A FOR COLLECTIVELY POWER SUPPLY PIN(PINA1, A4, A9, A12, B1, B4, B9, B12); 1.25A FOR VCONN PIN; 0.25A FOR OTHER SIGNAL PIN.
   2.3 DIELECTRIC WITHSTANDING VOLTAGE: 100V AC R.M.S.
   2.4 INSULATION RESISTANCE 100MΩ Min
   2.5 OPERATING TEMPERATURE: -40° C ~ 85° C
3 MECHANICAL CHARACTERISTICS:
   3.1 MATING FORCE: 5~20 N.
   3.2 UNMATED FORCE: 8~20N INITIAL TEST; 6~20N DURABILITY AFTER TEST
   3.3 DURABILITY: 10,000 CYCLES
4. PLATING
   4.1 TERMINAL CONTACT: (SEE TAB)GOLD PLATING ON CONTACT AREA, ALL OVER 50u" Min NICKEL AND 80u"Min Matte Tin ALL OVER 50u" Min NICKEL ON SOLDER AREA
   4.2 SHELL: 50u" Min. NICKEL ALL OVER,
   4.3 COVER SHELL: 80u" Min. NICKEL ALL OVER,
   4.4 INNER GROUND COVER SHELL: CLEAN
   4.5 MID PLATE: CLEAN

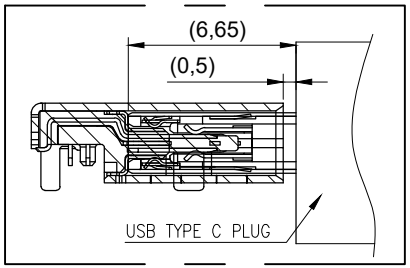

料 号	规 格
82224-052	TYPE-CF 24P沉板2.0 双壳10.0款脚长1.6MM,黑胶LCP镀锡,金手指3U焊脚雾锡
82224-214	TYPE-CF 24P沉板2.0 双壳10.0款脚长1.6MM,黑胶LCP焊脚镀金1U,金手指3U
82224-218	TYPE-CF 24P沉板2.0 双壳10.0款脚长1.6MM,黑胶LCP焊脚镀金1U,金手指3U

MARK	DESCRIPTION	DATE	REVISED	APPROVED
△X				
△X				
△X				

REVISIONS

UNSPECIFIED TOLERANCES	
ANGLAR	±5°
L≤ 4	±0.2
4<L≤ 16	±0.3
16<L≤ 63	±0.4
L> 63	±0.5

www.hiemi.cn

HIEMI TECHNOLOGY CO., LTD

DSND		SCALE: N/A	TYPE C母座24PIN 沉板2.0 L=10.0 双壳脚长1.6
DWN		VIEW:	PART NO.: SEE TABLE
CHKD		UNIT: mm/in	DWG NO.:
APPD		SIZE: A4	

WEIGHT	SHEET	REVISION
	1/1	A0

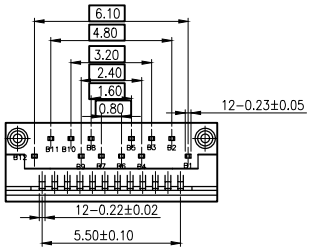

Detail C

USB TYPE-C PIN ASSIGNMENTS

PIN NUMBER	SIGNAL NAME	PIN NUMBER	SIGNAL NAME
A1	GND	B12	GND
A2	SSTXp1	B11	SSRXp1
A3	SSTXn1	B10	SSRXn1
A4	VBUS	B9	VBUS
A5	CC1	B8	SBU2
A6	Dp1	B7	Dn2
A7	Dn1	B6	Dp2
A8	SBU1	B5	CC2
A9	VBUS	B4	VBUS
A10	SSRXn2	B3	SSTXn2
A11	SSRXp2	B2	SSTXp2
A12	GND	B1	GND

Detail C

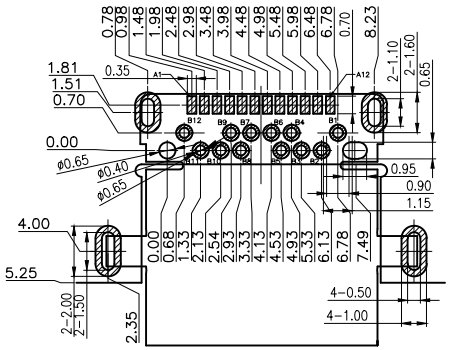

RECOMMEND P.C.B LAYOUT(COMPONENT SIDE)

TOLERANCE FOR PCB LAYOUT IS ± 0.05

KEEP OUT ARE

MARK	DESCRIPTION	DATE	REVISED	APPROVED
△X				
△X				
△X				

REVISIONS

UNSPECIFIED TOLERANCES	
ANGLAR	±5°
L≤ 4	±0.2
4<L≤ 16	±0.3
16<L≤ 63	±0.4
L> 63	±0.5

www.hiemi.cn

HIEMI TECHNOLOGY CO., LTD

DSND		SCALE: N/A	SEE TABLE
DWN		VIEW:	PART NO.:
CHKD		UNIT: mm/in	DWG NO.:
APPD		SIZE: A4	

WEIGHT	SHEET	REVISION
	1/1	A0