RoHS Compliant

受控文件

REV	DESCRIPTION	DATE	APPROVED
A0	出版发行	2020.07.16	

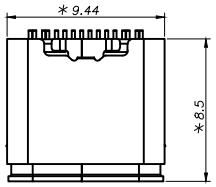

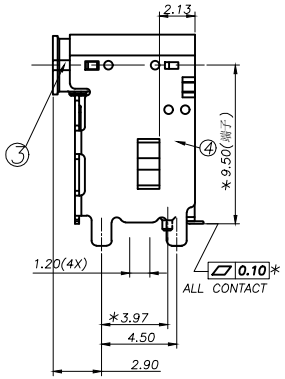

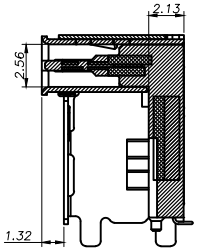

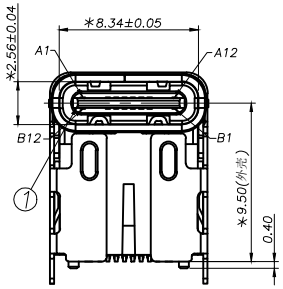

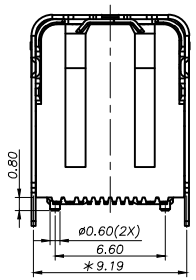

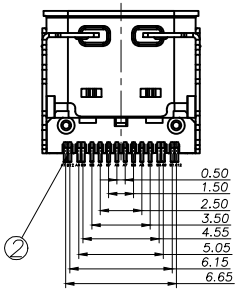

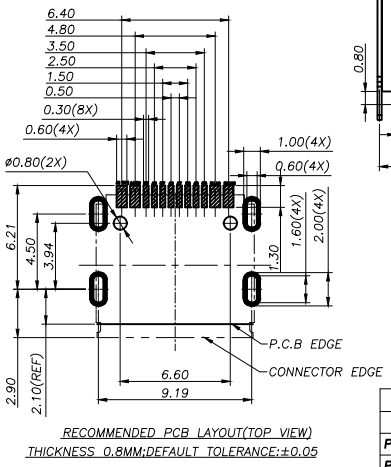

RECOMMENDED PCB LAYOUT(TOP VIEW)
THICKNESS 0.8MM;DEFAULT TOLERANCE:±0.05

NOTES:
1.MECHANICAL:
MATING FORCE: 5~20N
UNMATING FORCE: 8~20N
DURABILITY: 10000 CYCLES MIN
2.ELECTRICAL:
CURRENT: 5.0A MAX
VOLTAGE: 20V MAX
WITHSTANDING VOLTAGE: 100V AC
CONTACT RESISTANCE: 40 m MAX INITIAL
50 m MAX AFTER 10000 CYCLES
3.ENVIRONMENTAL
OPERATING TEMPERATURE RANGE −30°C ~ +80°C

材料规格说明

1. 端子：C7025 T=0.15mm 半金雾锡1U″
2. 卡勾：SUS301 H T=0.15mm 素材
3. Molding：LCP 黑色 UL94 V-0
4. 内壳：SUS304 1/4H T=0.30mm Ni:50u″
5. 外壳：SUS304 1/4H T=0.25mm Ni:50u″

USB TYPE-C PIN ASSIGNMENTS

PIN NUMBER	A1	A4	A5	A6	A7	A8	A9	A12
SIGNAL NAME	GND	Vbus	CC1	D+	D−	SBU1	Vbus	GND
PIN NUMBER	B12	B9	B8	B7	B6	B5	B4	B1
SIGNAL NAME	GND	Vbus	SBU2	D−	D+	CC2	Vbus	GND

Line connection diagram	
Connector PIN	Welding
PIN A4 A9 B4 B9	Vbus
PIN A1 A12 B1 B12	GND
PIN A5	CC
PIN A6	D+
PIN A7	D−
PIN A8	
PIN B5	
PIN B6	
PIN B7	
PIN B8	

骇米科技电子（深圳）有限公司
HIEMI Technology(SHENZHEN) Co., Ltd

Product name: TYPE-C 16PIN板上卧式加高CH=9.5MM

DWG.NO		Tolerance		DNIT	mm
DATE	2020.07.16	X ±0.50	X.° ±2°	SCALE	1:1
		X.X ±0.30	X.X° ±1°		
DESIGN		X.XX ±0.10		MANUFACTURERS	
APPROVED		X.XXX ±0.05			

All specifications above are owned by Shenzhen Tuozhi Electronics Co., Ltd., patented products, imitation is prohibited.

RoHS Compliant

受控文件

REV	DESCRIPTION	DATE	APPROVED
A0	出版发行	2020.07.16	

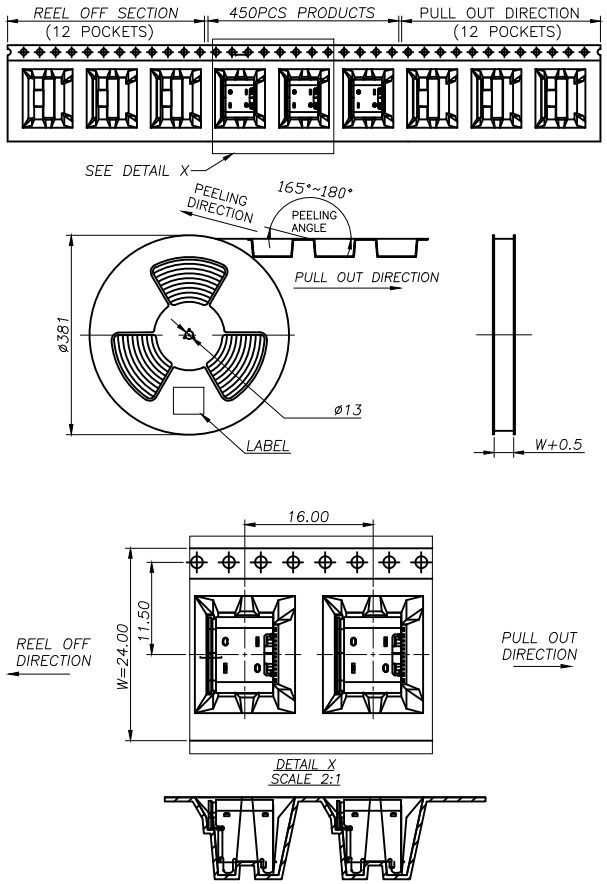

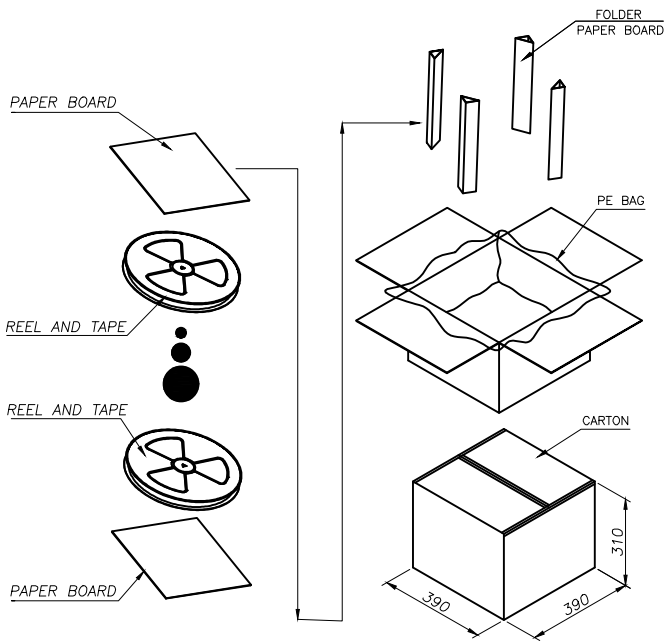

每盘450PCS
每箱10盘(4500PCS)

骇米科技电子（深圳）有限公司
HIEMI Technology(SHENZHEN) Co., Ltd

Product name: TYPE-C 16PIN板上卧式加高CH=9.5MM

DWG.NO		Tolerance		DNIT	mm
DATE	2020.07.16	X ± 0.50	X.° ± 2°	SCALE	1:1
		X.X ± 0.30	X.X° ± 1°		
DESIGN		X.XX ± 0.10		MANUFACTURERS	
APPROVED		X.XXX ± 0.05			

All specifications above are owned by Shenzhen Tuozhi Electronics Co., Ltd., patented products, imitation is prohibited.