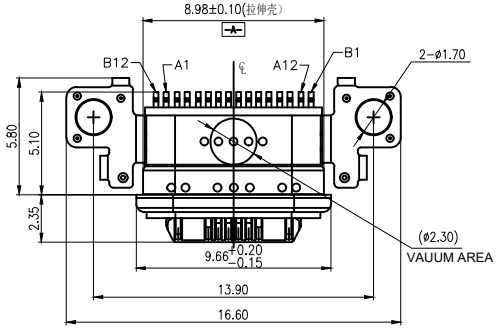


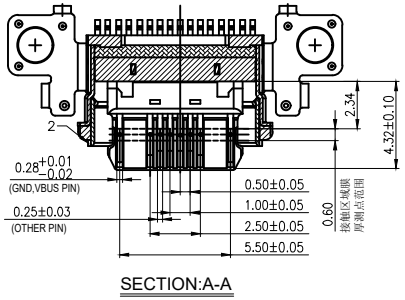


SECTION:A-A

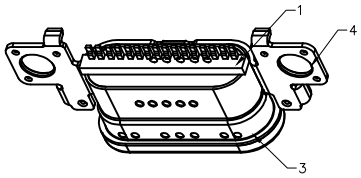


3D VIEW

IP-X8

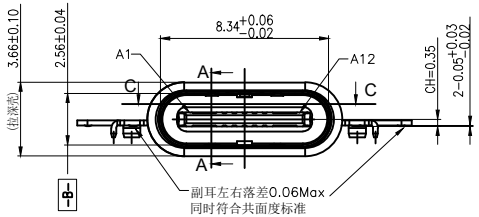


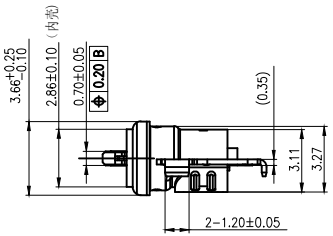


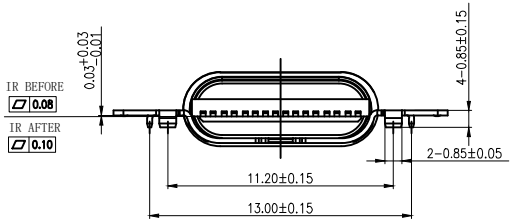


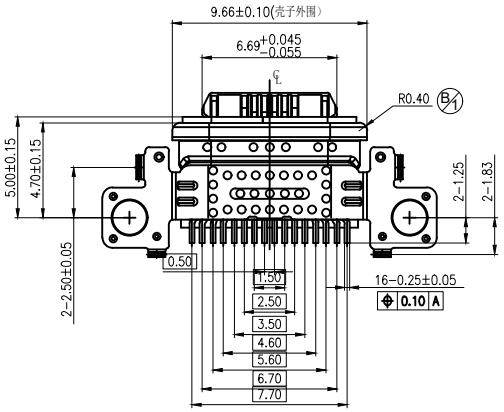


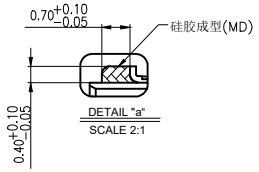


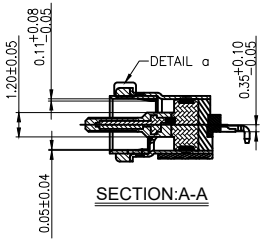


SECTION:A-A

| NO. | NAME | METERIAL | REMARKS | QTY |
|---|---|---|---|---|
| 6 | GLUE | EPOXY RESIN | COLOR:BLACK | x g |
| 5 | LIM_ RING | SLILICA GEL | COLOR:RED | 1 PCS |
| 4 | VEST SHELL | SUS 304-1/2H,T=0.25mm | 50u" NICKEL PLATED | 1 PCS |
| 3 | OUT SHELL | SUS 316L,T=0.15mm | 50u" NICKEL PLATED | 1 PCS |
| 2 | INNER SHELL | SUS 304-1/2H,T=0.15mm | NO PLATING | 1 PCS |
| 1 | INSERT MD | MID PLATE, SUS 301-H,T=0.20mm | NO PLATING | |
| | | CONTACT:C18400,T=0.12mm | CONTACT AREA:3u"AU/50u"NICKEL PLATED | 1 SET |
| | | PLASTIC:PA46 | COLOR:BLACK,UL94V_0 | |

| MARK | DESCRIPTION | DATE | REVISED | APPROVED |
|---|---|---|---|---|
| △X | | | | |
| △X | | | | |
| △X | | | | |

REVISIONS

| UNSPECIFIED TOLERANCES | |
|---|---|
| ANGLAR | ±5° |
| L≤ 4 | ±0.2 |
| 4<L≤ 16 | ±0.3 |
| 16<L≤ 63 | ±0.4 |
| L> 63 | ±0.5 |

www.hiemi.cn

HIEMI TECHNOLOGY CO., LTD

| | | |
|---|---|---|
| DSND | | SCALE: N/A |
| DWN | | VIEW: |
| CHKD | | UNIT: mm/in |
| APPD | | SIZE: A4 |

USB TYPE C 16 PIN REC WATERPROOF
CONN,CH=0.35mm
SCREW HOLE CENTER DISTANCE=13.90mm

PART NO.: 82216-981

DWG NO.:

| WEIGHT | SHEET | REVISION |
|---|---|---|
| | 1/1 | A0 |

PIN DEFINITION:

| PIN DEFINE TABLE | | | |
|---|---|---|---|
| PIN | SIGNAL | PIN | SIGNAL |
| A12 | GND | B1 | GND |
| A11 | | B2 | |
| A10 | | B3 | |
| A9 | VBUS | B4 | VBUS |
| A8 | SBU1 | B5 | CC2 |
| A7 | Dn1 | B6 | Dp2 |
| A6 | Dp1 | B7 | Dn2 |
| A5 | CC1 | B8 | SBU2 |
| A4 | VBUS | B9 | VBUS |
| A3 | | B10 | |
| A2 | | B11 | |
| A1 | GND | B12 | GND |

MID PLATE

Not contact the MID plate

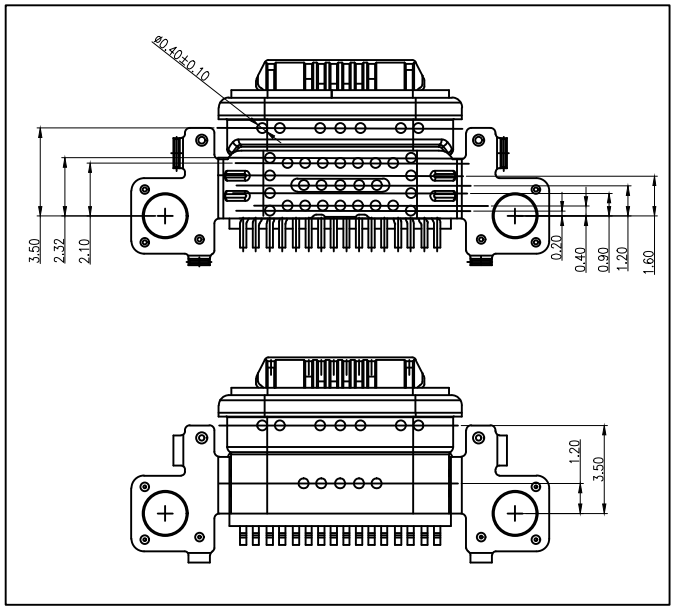


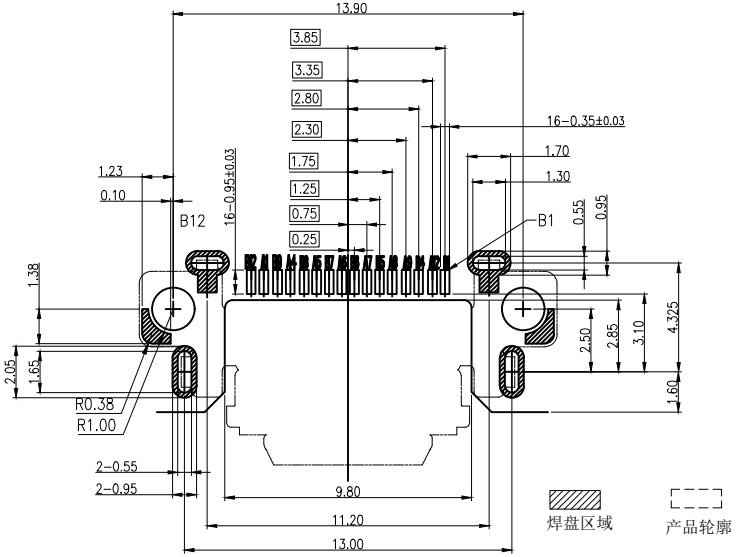


RECOMMENED PCB LAYOUT(T=0.70)

SCALE 1:1(GENERAL TOLERANCE±0.05

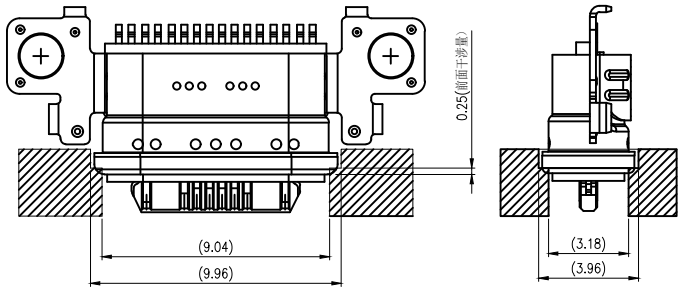


RECOMMENDED CAVITY SIZE

| MARK | DESCRIPTION | DATE | REVISED | APPROVED |
|---|---|---|---|---|
| | | | | |
| △X | | | | |
| △X | | | | |
| △X | | | | |

REVISIONS

| UNSPECIFIED TOLERANCES | |
|---|---|
| ANGLAR | ±5° |
| L≤ 4 | ±0.2 |
| 4<L≤ 16 | ±0.3 |
| 16<L≤ 63 | ±0.4 |
| L> 63 | ±0.5 |

www.hiemi.cn

HIEMI TECHNOLOGY CO., LTD

| | | | |
|---|---|---|---|
| DSND | | SCALE: N/A | USB TYPE C 16 PIN REC WATERPROOF CONN, CH=0.35mm SCREW HOLE CENTER DISTANCE=13.90mm |
| DWN | | VIEW: | PART NO.: 82216-981 |
| CHKD | | UNIT: mm/in | DWG NO.: |
| APPD | | SIZE: A4 | |

| WEIGHT | SHEET | REVISION |
|---|---|---|
| | 1/1 | A0 |