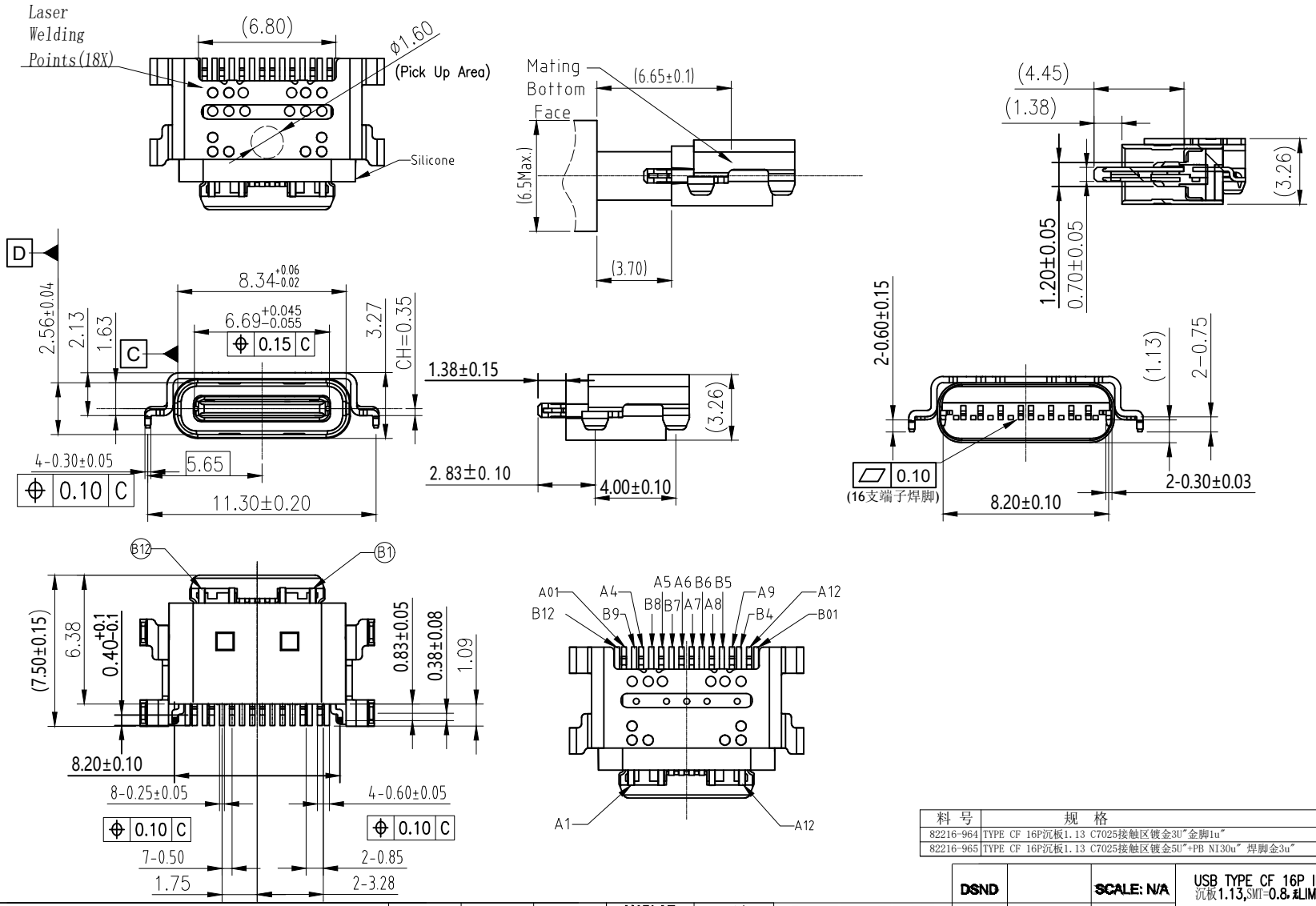

料 号	规 格
82216-964	TYPE CF 16P沉板1.13 C7025接触区镀金3U"金脚1u"
82216-965	TYPE CF 16P沉板1.13 C7025接触区镀金5U"+PB NI30u" 焊脚金3u"

MARK	DESCRIPTION	DATE	REVISED	APPROVED
△X				
△X				
△X				

REVISIONS

ANGLAR	±5°
L≤ 4	±0.2
4<L≤ 16	±0.3
16<L≤ 63	±0.4
L> 63	±0.5

UNSPECIFIED TOLERANCES

www.hiemi.cn

HIEMI TECHNOLOGY CO., LTD

DSND		SCALE: N/A	USB TYPE CF 16P IPX8防水型, 沉板1.13,SMT=0.8,无LIM柱
DWN		VIEW:	PART NO.: SEE TABLE
CHKD		UNIT: mm/in	DWG NO.:
APPD		SIZE: A4	

WEIGHT	SHEET	REVISION
	1/1	A0

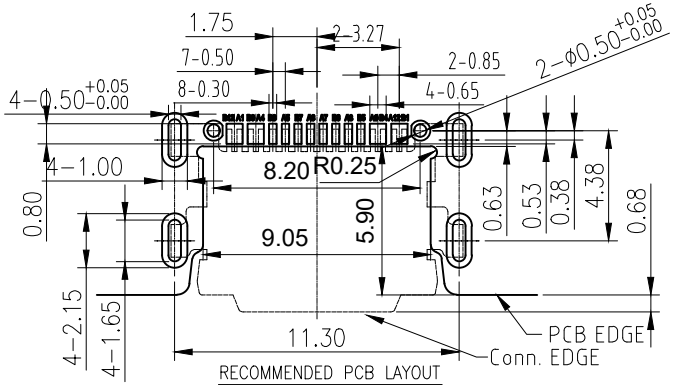

RECOMMENDED PCB LAYOUT

TOLERANCE:±0.05

(建议使用刷Sn钢板厚度0.12mm)

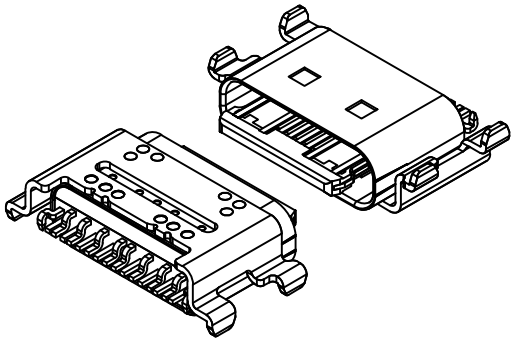

NOTES:

1.MATERIAL SPECIFICATION:
- 1-1.HOUSING:High-Temp Plastics,UL94V-0,Color:Black.
- 1-2.CONTACTS:Copper Alloy T=0.25mm.
- 1-3.OUTER SHELL:Stainless Steel,T=0.30mm.
- 1-4.INNER SHELL:Stainless Steel,T=0.20mm.
- 1-5.MID-PLATE:Stainless Steel,T=0.20mm.
- 1-6.SOLDER-PLATE:Stainless Steel,T=0.10mm.

2.PLATING SPECIFICATION:
- 2-1.CONTACS:
  Ni UNDERPLATED OVER ALL;
  Gold Plated On Contact Area;
  Gold Flash Plated On Solder Area.
- 2-2.SHELL:
  Ni UNDERPLATED OVER ALL;
  Gold Flash Plated ON Solder Leg.

3.RoHS AND HF COMPLIANT.

4.MECHANICAL PERFORMANCE:
- 4-1.MATING FORCE:6~20N(Initial);5~20N(After)
- 4-2.UNMATING FORCE:8~20N(Initial);6~20N(After)
- 4-3.DURABILITY:10000 CYCLES.

5.ELECTRICAL PERFORMANCE:
- 5-1.CURRENT RATING:3A;VOLTAGE RATING:5.0V
- 5-2.LLCR:
  VBUS & GND PINS:40mOHM/PIN MAX.;
  OTHERS PINS:40mOHM/PIN MAX.;
  LLCR MAX. CHANGE OF ALL PINS:20mΩ.
- 5-3.INSULATION RESISTANCE:100MΩ MIN.
- 5-4.DIELECTRIC WITHSTANDING VOLTAGE:
  100V AC FOR 1 MINUTE.

6.ENVIROMENTAL PERFORMANCE:
  OPERATING TEMPERATURE:-20℃~+85℃.

7.RECOMMENDED PROCESS:
  THE PEAK TEMPERATURE ON THE BOARD SHALL MAINTAIN 10±1 SECONDS AT 255±5℃.

Pin Assignments

Contact Number	Signal Name	Contact Number	Signal Name
A1	GND	B12	GND
A4	VBUS	B9	VBUS
A5	CC1	B8	SBU2
A6	Dp1	B7	Dn2
A7	Dn1	B6	Dp2
A8	SBU1	B5	CC2
A9	VBUS	B4	VBUS
A12	GND	B1	GND

MARK	DESCRIPTION	DATE	REVISED	APPROVED
△X				
△X				
△X				

REVISIONS

UNSPECIFIED TOLERANCES	
ANGLAR	±5°
L≤ 4	±0.2
4<L≤ 16	±0.3
16<L≤ 63	±0.4
L> 63	±0.5

www.hiemi.cn

HIEMI TECHNOLOGY CO., LTD

DSND		SCALE: N/A	USB TYPE CF 16P IPX8防水型, 沉板1.13,SMT=0.8,无LIM柱
DWN		VIEW:	PART NO.: SEE TABLE
CHKD		UNIT: mm/in	DWG NO.:
APPD		SIZE: A4	

WEIGHT	SHEET	REVISION
	1/1	A0

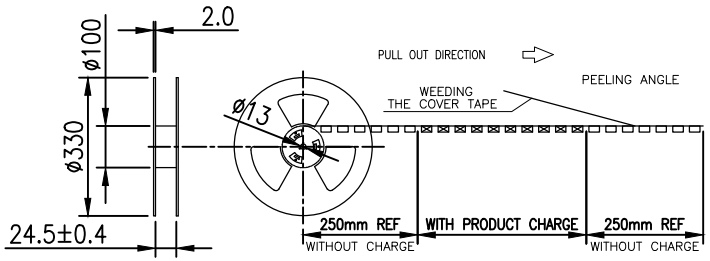

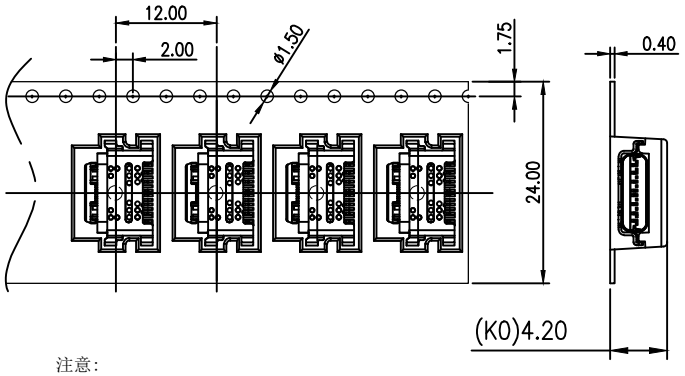

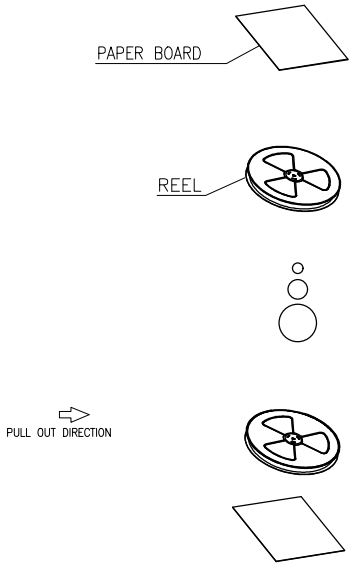

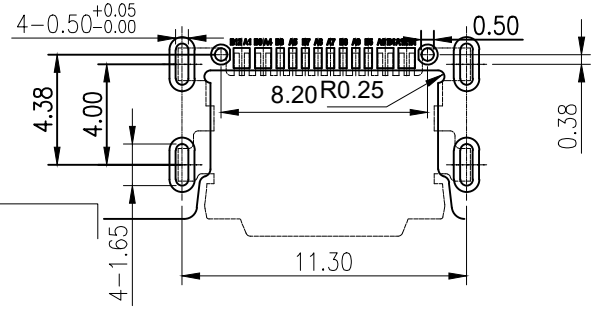

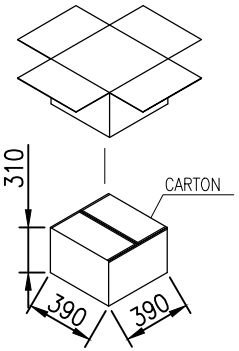

NOTE:
1.QUANTITY:1000 PCS/RELL,5000PCS/CARTON.

注意:
1.材料:
纸箱:纤维板，瓦楞，双层壁。
胶带:聚苯乙烯，耐热温度:120℃，白。
卷筒:聚苯乙烯，耐热温度:70℃，蓝色。
包装:聚乙烯，耐热温度:100℃。
2.剥离强度:0.1 ~ 1.3 N(10 ~ 130克)
3.脱皮速度:300mm /min。
4.每个袋子都应包括干燥剂*1。
5.外箱上贴号物料标签及RoHS标签
6.同一产品只能装同一纸箱，不允其它产品;

MARK	DESCRIPTION	DATE	REVISED	APPROVED
△X				
△X				
△X				

REVISIONS

UNSPECIFIED TOLERANCES	
ANGLAR	±5°
L≤ 4	±0.2
4<L≤ 16	±0.3
16<L≤ 63	±0.4
L> 63	±0.5

www.hiemi.cn

HIEMI TECHNOLOGY CO., LTD

DSND		SCALE: N/A	USB TYPE CF 16P IPX8防水型, 沉板1.13,SMT=0.8,无LIM柱
DWN		VIEW:	PART NO.: SEE TABLE
CHKD		UNIT: mm/in	DWG NO.:
APPD		SIZE: A4	

WEIGHT	SHEET	REVISION
	1/1	A0