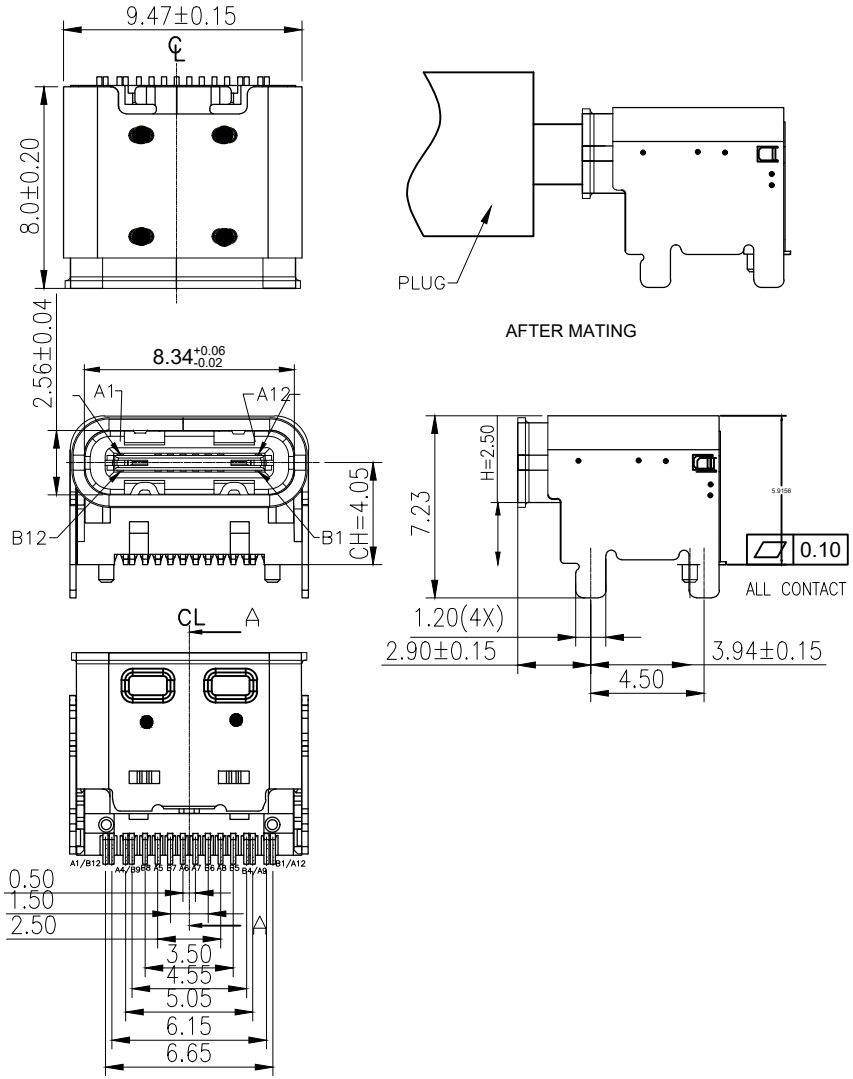

NOTE:

1. MATERIAL SPECIFICATION:
   1. HOUSING:HIGH TEMPERATURE RESISTANT PLASTIC,UL94 V-0.
   2. CONTACTS:COPPER ALLOY C7025
   3. MID PLATE: STAINLESS STEEL SUS304
   4. FRONT SHELL: STAINLESS STEEL SUS304
   5. TOP SHELL: STAINLESS STEEL sus301

2. PLATING SPECIFICATION:
   2-1. CONTACTS:
   Ni 50u" MIN. UNDER PLATED OVER ALL.
   Au 3u"PLATED ON THE FUNCTIONAL AREA OF CONTACT.
   Au G/F PLATED ON SOLDER AREA.

   2-2. FRONT SHELL&TOP SHELL:
   Ni 30u" MIN. UNDER PLATED OVER ALL.
   2-3. SHIELD PLATE&EMI PLATE: CLEAR ONLY

3. MECHANICAL PERFORMANCE,
   3-1. INSERTION FORCE: 0.5~2.0kgf.
   3-2. REMOVAL FORCE: 0.8kgf~2.0kgf.
   3-3. DURABILITY: 10000 CYCLES.

4. ELECTRICAL PERFORMANCE,
   4-1. CURRENT RATING:5.0A
   VOLTAGE RATING:5.0V
   4-2. LLCR:
   VBUS & GND PINS AND OTHER PINS: 40mΩ/PIN MAX.
   SHIELD: 50mΩ/MAX.
   LLCR MAX. CHANGE OF ALL PINS: 10mΩ.
   4-3. INSULATION RESISTANCE: 100MΩ MIN
   4-4. DIELECTRIC WITHSTAND VOLTAGE,AC 100V FOR 1 MINUTE.
5. ENVIRONMENTAL PERFORMANCE:
   OPERATING TEMPERATURE: -25° C~+85° C.
   THE PEAK TEMPERATURE ON THE BOARD SHALL

USB TYPE-C PIN ASSIGNMENTS

PIN NUMBER	A1	A4	A5	A6	A7	A8	A9	A12
SIGNAL NAME	GND	VBUS	CC1	Dp1	Dn1	SBU1	VBUS	GND
PIN NUMBER	B12	B9	B8	B7	B6	B5	B4	B1
SIGNAL NAME	GND	VBUS	SBU2	Dn2	Dp2	CC2	VBUS	GND

MARK	DESCRIPTION	DATE	REVISED	APPROVED
△X				
△X				
△X				

REVISIONS

UNSPECIFIED TOLERANCES	
ANGLAR	±5°
L≤ 4	±0.2
4<L≤ 16	±0.3
16<L≤ 63	±0.4
L> 63	±0.5

www.hiemi.cn

HIEMI TECHNOLOGY CO., LTD

DSND		SCALE: N/A	TYPE-C 16PIN母座 垫高2.5 四脚插板SMT CH=4.05 L=8.0mm 短款外壳
DWN		VIEW:	PART NO.: 82216-514
CHKD		UNIT: mm/in	DWG NO.:
APPD		SIZE: A4	

WEIGHT	SHEET	REVISION
	1/1	A0

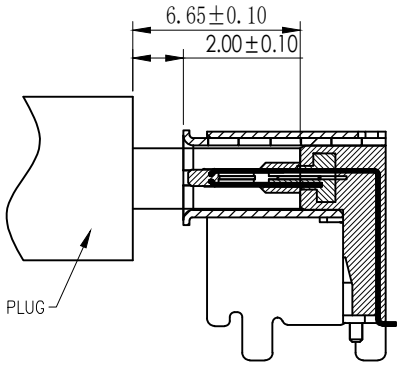

AFTER MATING

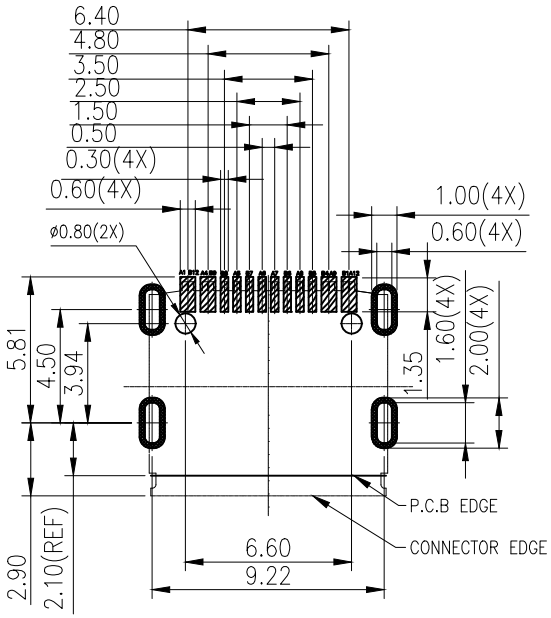

RECOMMENDED PCB LAYOUT(TOP VIEW)

USB TYPE-C PIN ASSIGNMENTS

PIN NUMBER	SIGNAL NAME	PIN NUMBER	SIGNAL NAME
A1	GND	B12	GND
A4	VBUS	B9	VBUS
A5	CC1	B8	SBU2
A6	Dp1	B7	Dn2
A7	Dn1	B6	Dp2
A8	SBU1	B5	CC2
A9	VBUS	B4	VBUS
A12	GND	B1	GND

TABLE 1

ITEM	P/N	HOUSING COLOR	CONTACTS		SHELL PLATING	DIM"A"
			FUNCTIONAL AREA	SOLDER AREA		
1	82216-178	BLACK（黑）	Au:3u"	Au:G/F	Ni	1.33
2	82216-179	WHITE（白）	Au:1u"	Au:G/F	Ni	1.33
3	82216-183	Wathet Blue（浅蓝）	Au:1u"	Au:G/F	Ni	1.33
4	82216-184	Orange（橙）	Au:1u"	Au:G/F	Ni	1.33
5	82216-185	green（绿）	Au:1u"	Au:G/F	Ni	1.33

MARK	DESCRIPTION	DATE	REVISED	APPROVED
△X				
△X				
△X				

REVISIONS

ANGLAR	±5°
L≤ 4	±0.2
4<L≤ 16	±0.3
16<L≤ 63	±0.4
L> 63	±0.5

UNSPECIFIED TOLERANCES

www.hiemi.cn

HIEMI TECHNOLOGY CO., LTD

DSND		SCALE: N/A	USB C F 16PIN SMT CH=4..05
DWN		VIEW:	PART NO.: SEE TABLE
CHKD		UNIT: mm/in	DWG NO.:
APPD		SIZE: A4	

WEIGHT	SHEET	REVISION
	1/1	A0

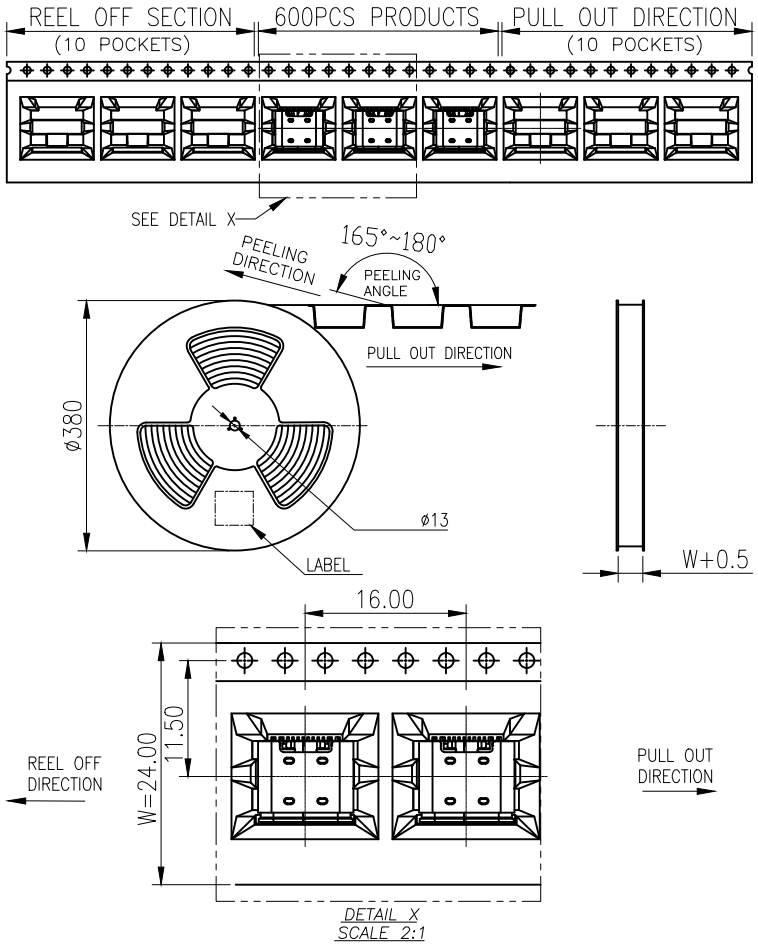

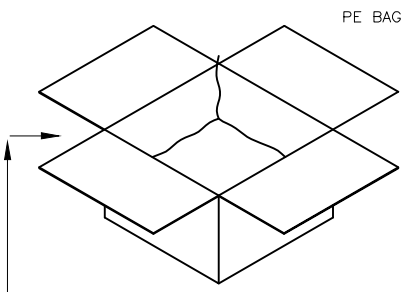

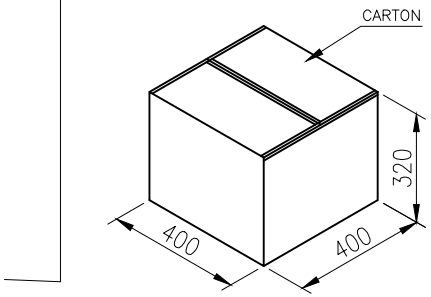

	REEL	CARTON
CONNECTOR (PCS)	600	6000

MARK	DESCRIPTION	DATE	REVISED	APPROVED
△X				
△X				
△X				

REVISIONS

UNSPECIFIED TOLERANCES	
ANGLAR	±5°
L≤ 4	±0.2
4<L≤ 16	±0.3
16<L≤ 63	±0.4
L> 63	±0.5

www.hiemi.cn

HIEMI TECHNOLOGY CO., LTD

DSND		SCALE: N/A	USB C F 16PIN SMT CH=4.05
DWN		VIEW:	PART NO.: SEE TABLE
CHKD		UNIT: mm/in	DWG NO.:
APPD		SIZE: A4	

WEIGHT	SHEET	REVISION
	1/1	A0