

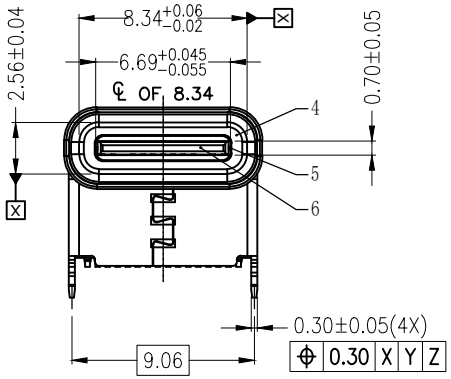

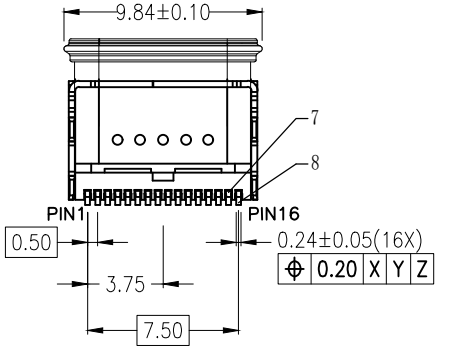

Notes:
1. ELECTICAL characteristics:
1-1. Dieletric withstance:500V AC/1minute.
1-2. Current rating:
Vbus and GND contact:≥1.25A/pin, Paralleled for a total of 5A Min
Other contacts:≥0.25A/pin
1-3. Initial LLCR 40mΩ max, after test Δ10mΩ max:
40mΩ MAX. FOR VBUS, GND AND OTHE CONTACTS,
50mΩ MAX. FINAL AFTER TEST.
1-4. Insulation Resistance:1000MΩ Min
2: Mechanical characteristics
2-1 Insert force:5~20N MAX.
Withdraw force:8~20N, after test:6~20N
2-2 Durability:10000 cycles min
2-3 Laser point:Height<0.05mm, Pulling force>50N
3: Envirmention characteristics
3-1 Opreating temperature:-40~+85℃
3-2 Salty spray:48hours(EIA-364-26B-B)
4. Burr:0.05MM MAX.
5. Tape and reel packing satisfy EIA-364-481 standard



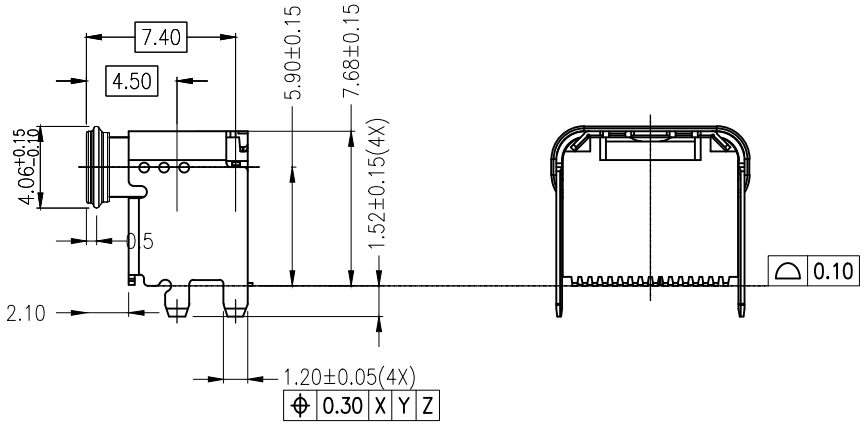

(16PIN SMT)

⑧	1	下端子	铜合金C7025 TM03	镀金3U
⑦	1	上端子	铜合金C7025 TM03	镀金3U
⑥	1	I/M	LCP E130I	/
⑤	1	中隔片	不锈钢SUS301	水洗
④	1	EMI	不锈钢SUS304	水洗
③	1	内铁壳	不锈钢SUS304	水洗
②	1	密封圈	液态硅胶成型黑色	/
①	1	外铁壳	不锈钢304	镀镍
序号	数量	零件名称	材料	镀层

MARK	DESCRIPTION	DATE	REVISED	APPROVED
△X				
△X				
△X				

REVISIONS

ANGLAR	±5°
L≤ 4	±0.2
4<L≤ 16	±0.3
16<L≤ 63	±0.4
L> 63	±0.5

UNSPECIFIED TOLERANCES

www.hiemi.cn

HIEMI TECHNOLOGY CO., LTD

DSND		SCALE: N/A	CH5.9 TYPE-C母座16P板上一体防水LIM款
DWN		VIEW:	PART NO.: 82216-505
CHKD		UNIT: mm/in	DWG NO.:
APPD		SIZE: A4	

WEIGHT	SHEET	REVISION
	1/1	A0

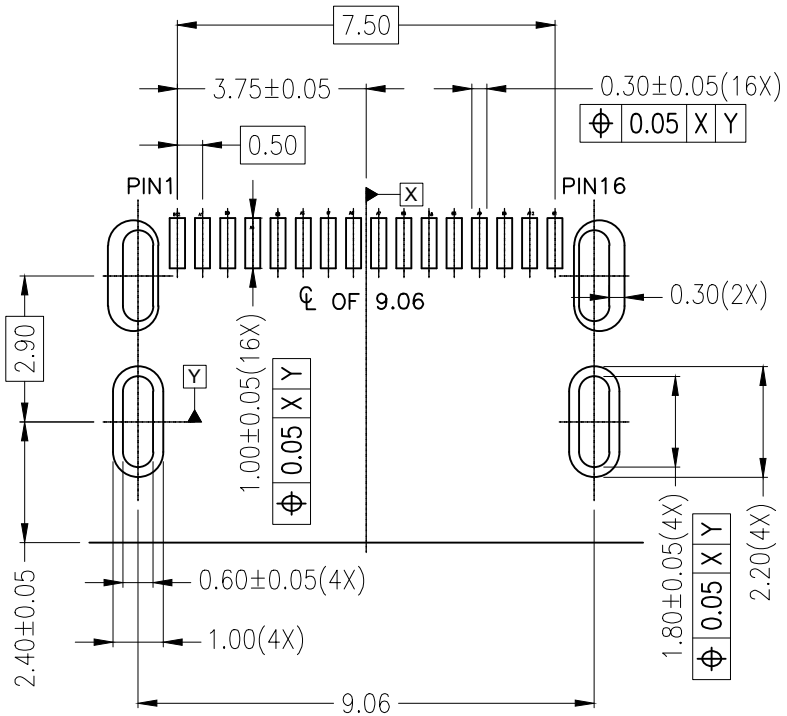

RECOMMENDED PCB LAYOUT(TOP VIEW)

PCB THICKNESS 1.72±0.05MM

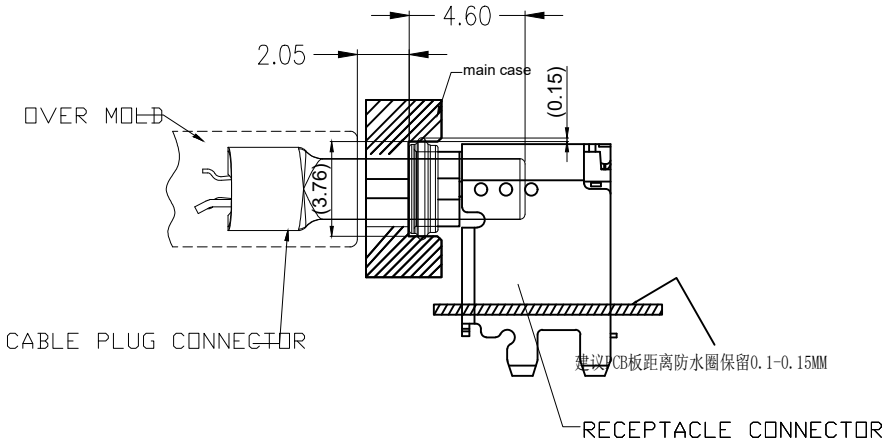

Pin		Signal	Description	Mating Sequence	Description	Signal	Pin	
2	A1	GND	Ground return	First	Ground return	GND	B12	1
/	A2	TX1+	/	Second	/	RX1+	B11	/
/	A3	TX1-	/	Second	/	RX1-	B10	/
4	A4	VBUS	Bus Power	First	Bus Power	VBUS	B9	3
6	A5	CC1	Configuration Channel	Second	Sideband Use(SBU)	SBU2	B8	5
8	A6	D+	Positive half of the USB 2.0 differential pair-Position 1	Second	Negative half of the USB 2.0 differential pair-Position 2	D-	B7	7
9	A7	D-	Negative half of the USB 2.0 differential pair-Position 1	Second	Positive half of the USB 2.0 differential pair-Position 2	D+	B6	10
11	A8	SBU1	Sideband Use(SBU)	Second	Configuration Channel	CC2	B5	12
13	A9	VBUS	Bus Power	First	Bus Power	VBUS	B4	14
/	A10	RX2-	/	Second	/	TX2-	B3	/
/	A11	RX2+	/	Second	/	TX2+	B2	/
15	A12	GND	Ground return	First	Ground return	GND	B1	16

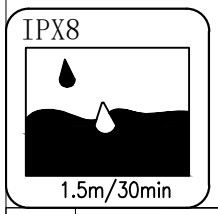

MARK	DESCRIPTION	DATE	REVISED	APPROVED
△X				
△X				
△X				

REVISIONS

UNSPECIFIED TOLERANCES	
ANGLAR	±5°
L≤ 4	±0.2
4<L≤ 16	±0.3
16<L≤ 63	±0.4
L> 63	±0.5

HIEMI TECHNOLOGY CO., LTD

www.hiemi.cn

DSND		SCALE: N/A
DWN		VIEW:
CHKD		UNIT: mm/in
APPD		SIZE: A4

CH5.9 TYPE-C母座16P板上一体防水LIM款

PART NO.: 82216-505

DWG NO.:

WEIGHT	SHEET	REVISION
	1/1	A0

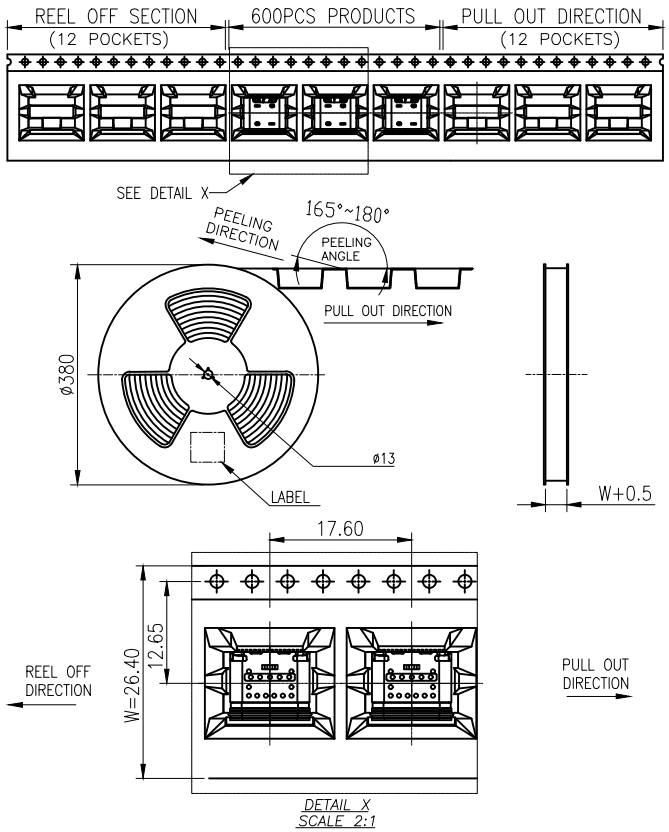

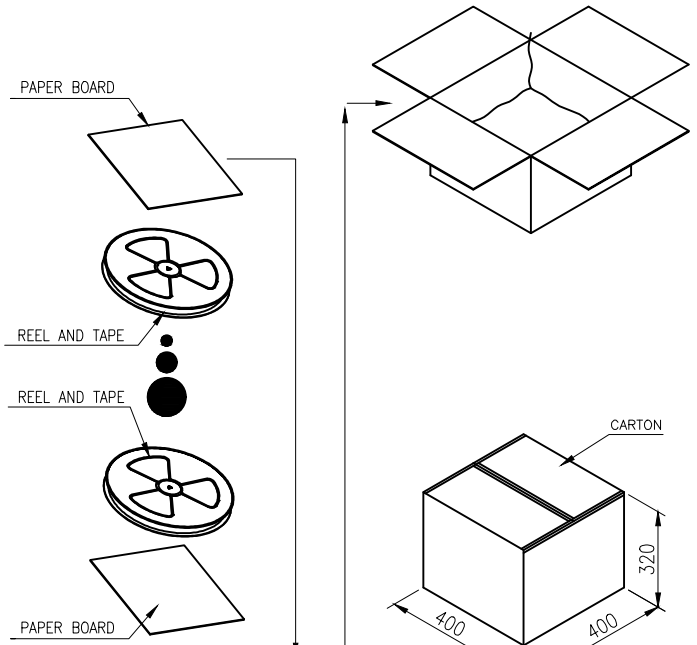

	REEL	CARTON
CONNECTOR (PCS)	600	6000

每盘真空包装

MARK	DESCRIPTION	DATE	REVISED	APPROVED
△X				
△X				
△X				

REVISIONS

UNSPECIFIED TOLERANCES	
ANGLAR	±5°
L≤ 4	±0.2
4<L≤ 16	±0.3
16<L≤ 63	±0.4
L> 63	±0.5

www.hiemi.cn

HIEMI TECHNOLOGY CO., LTD

DSND		SCALE: N/A	USB C F 16PIN SMT CH=5.9
DWN		VIEW:	PART NO.: 82216-505
CHKD		UNIT: mm/in	DWG NO.:
APPD		SIZE: A4	

WEIGHT	SHEET	REVISION
	1/1	A0