RoHS

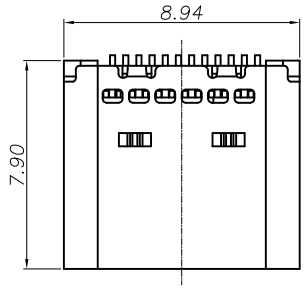

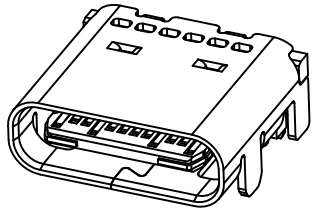

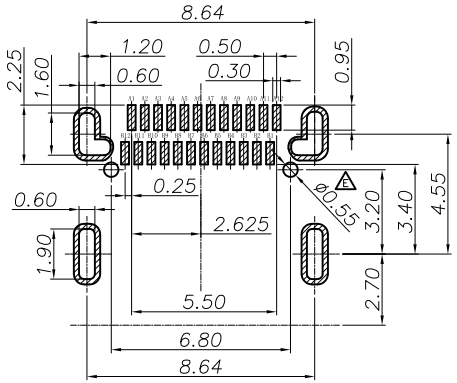

RECOMMENDED P.C.B. LAYOUT
TOLERANCE UNSPECIFIED ±0.05mm

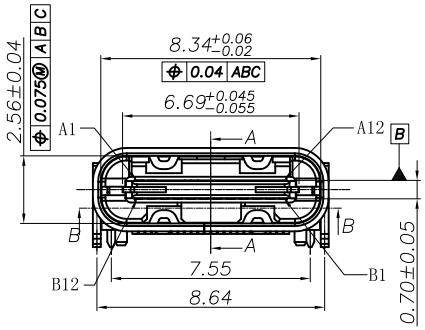

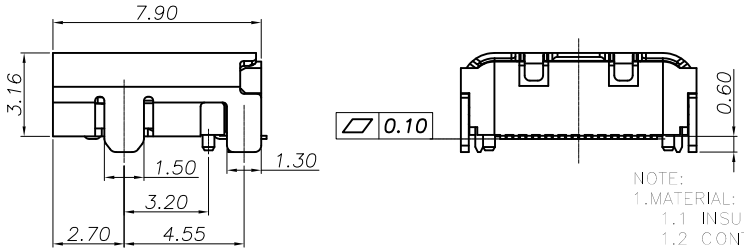

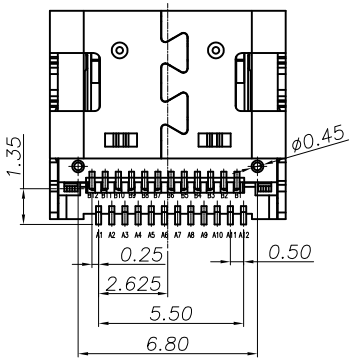

NOTE:
1.MATERIAL:
- 1.1 INSULATOR: HIGH TEMPERATURE PLASTIC UL 94 V−0;
- 1.2 CONTACT: COPPER ALLOY
- 1.3 SHELL:STAINLESS STEEL

2.ELECTRICAL CHARACTERISTICS;
- 2.1 CONTACT RESISTANCE: 40mΩ Max FOR INITIAL. 10mΩ CHANGE AFTER TEST. MEASURE AT 20mV, 100mA.
- 2.2 CONTACT CURRENT RATING: 3A FOR V_{BUS} PIN; 1.25A FOR V_{CONN} PIN.
- 2.3 DIELECTRIC WITHSTANDING VOLTAGE: 100V AC R.M.S.
- 2.4 INSULATION RESISTANCE 100MΩ Min
- 2.5 OPERATING TEMPERATURE: −25°C ~ 85°C

3.MECHANICAL CHARACTERISTICS:
- 3.1 MATING FORCE: 5~20 N.
- 3.2 UNMATED FORCE: 8~20N AFTER TEST
- 3.3 DURABILITY: 10,000 CYCLES

4.PLATING
- 4.1 TERMINAL CONTACT: (SEE TAB) GOLD PLATING ALL OVER 60u" Min NICKEL
- 4.2 SHELL: 50u" Min. NICKEL ALL OVER.

A1	GND	B12	GND
A2	SSTXP1	B11	SSRXP1
A3	SSTXN1	B10	SSRXN1
A4	VBUS	B9	VBUS
A5	CC1	B8	SBU2
A6	DP1	B7	DN2
A7	DN1	B6	DP2
A8	SBU1	B5	CC2
A9	VBUS	B4	VBUS
A10	SSRXN2	B3	SSTXN2
A11	SSRXP2	B2	SSTXP2
A12	GND	B1	GND
PIN	SIGNAL NAME	PIN	SIGNAL NAME

MARK	DESCRIPTION	DATE	REVISED	APPROVED
ΔX				
ΔX				
ΔX				

REVISIONS

UNSPECIFIED TOLERANCES	
ANGLAR	±5°
L≤ 4	±0.2
4<L≤ 16	±0.3
16<L≤ 63	±0.4
L> 63	±0.5

www.hiemi.cn

HIEMI TECHNOLOGY CO., LTD

DSND		SCALE: N/A	USB C F TYPE 双孔:SMT 四脚插板有柱带凸包CONN
DWN		VIEW:	PART NO.:
CHKD		UNIT: mm/in	DWG NO.:
APPD		SIZE: A4	

WEIGHT	SHEET	REVISION
	1/1	A0

RoHS

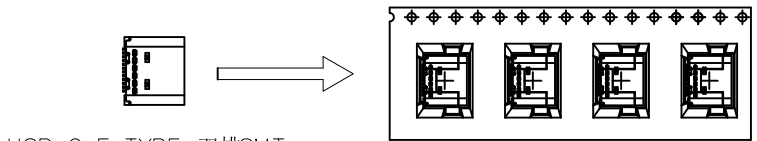

USB C F TYPE 双排SMT
四脚插板 有柱 CONN

① 产品入载带示意图

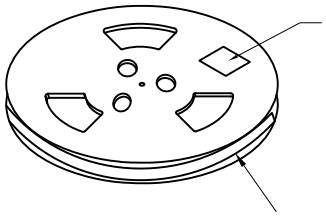

② 卷盘贴标签示意图

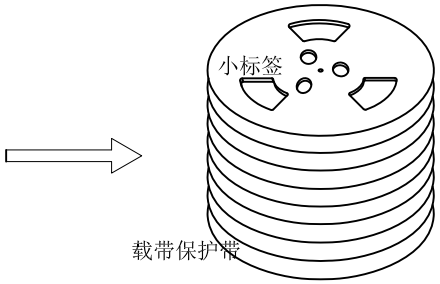

③ 10盘产品叠层示意图

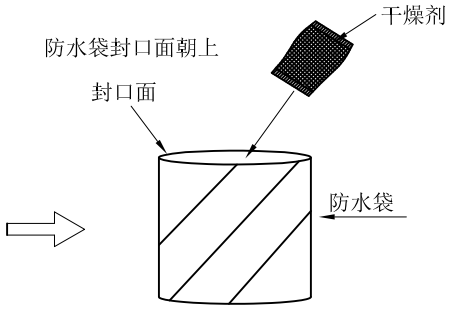

④ 10盘产品入防水袋示意图

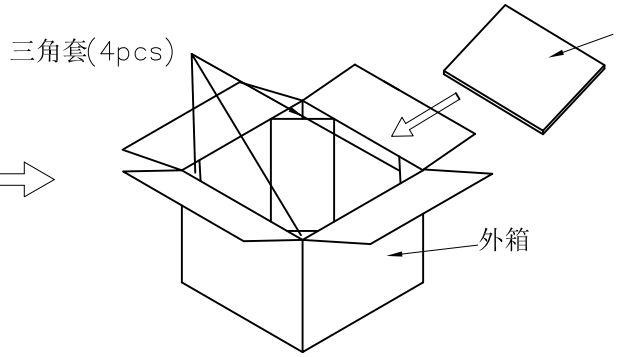

⑤ 产品入外箱示意图

分别放在外箱
底面和最上面

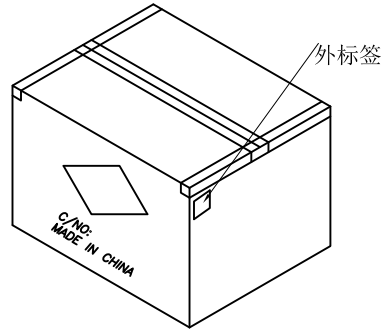

⑥ 外箱封箱示意图

NOTE:

1.QUANTITY/REEL: 900 PCS
數量/卷: 900 PCS
QUANTITY/INNER CARTON: 900 X 10 = 9000 PCS
數量/箱: 900 X 10 = 9000 PCS
2.FREE 27 CAVE IN THE FRONT CARRIER ADN FREE 27 CAVE IN THE END CARRIER.
包装带内圈空27格,外圈空27格.

ITEM	DESC.	MATERIAL	REMARKS	QTY
1	成品		C TYPE 母座成品	900
2	CARRIER TAPE	PET	W=24mm T=0.35mm	15.26mm
3	COVER TAPE	PET	W=21.3mm T=0.05mm	16.26mm
4	小标签		L102mm*W59mm	10
5	卷盘	PS	ø330mm*W28.5mm	10
6	天地板	K3K	L380mm*W380mm	2
7	外标签		L102mm*W102mm	1
8	三角柱	K=K	L300mm*W210mm	4
9	外箱	A=A	L400mm*W400mm*335mm	1
10	防水袋	PS	L900mm*W800mm	1
11	干燥剂			1

MARK	DESCRIPTION	DATE	REVISED	APPROVED
ΔX				
ΔX				
ΔX				

REVISIONS

UNSPECIFIED TOLERANCES	
ANGLAR	±5°
L≤ 4	±0.2
4<L≤ 16	±0.3
16<L≤ 63	±0.4
L> 63	±0.5

www.hiemi.cn

HIEMI TECHNOLOGY CO., LTD

DSND		SCALE: N/A	USB C F TYPE 双排SMT 四脚插板有柱带凸包CONN
DWN		VIEW:	PART NO.:
CHKD		UNIT: mm/in	DWG NO.:
APPD		SIZE: A4	

WEIGHT	SHEET	REVISION
	1/1	A0