RoHS

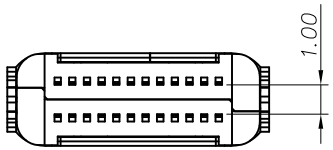

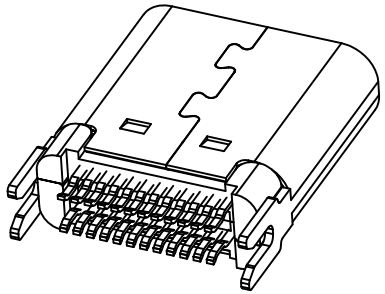

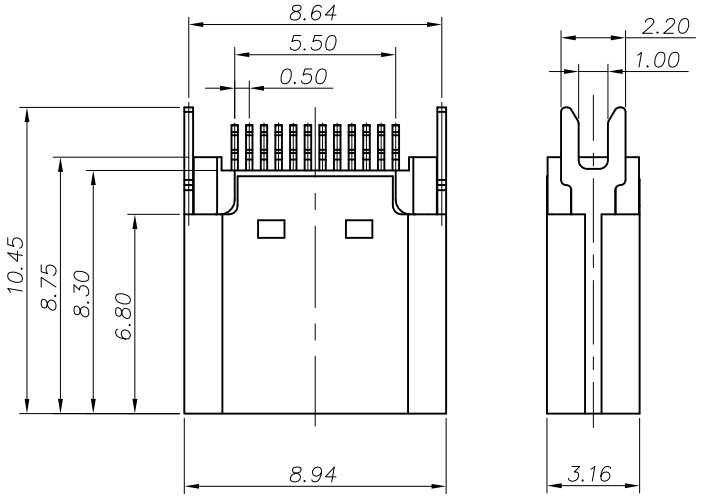

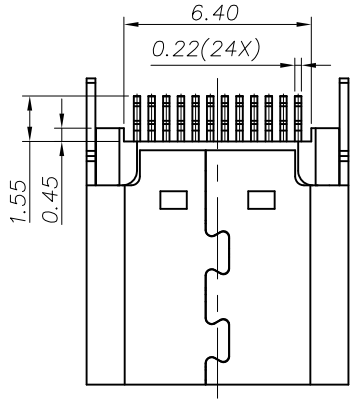

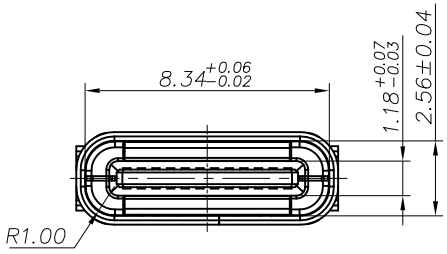

NOTE:
1.MATERIAL SPECIFICATION:
1.HOUSING: LCP,UL94 V-0.
2.TERMINAL: COPPER ALLOY
3.MID PLATE: STAINLESS STEEL
4.FRONT SHELL: STAINLESS STEEL
5.EMI PLATE: STAINLESS STEEL
2.PLATING SPECIFICATION:
2-1.TERMINAL:
Ni 50u" MIN. UNDER PLATED OVER ALL.
Au PLATED ON THE FUNCTIONAL AREA OF CONTACT.
(GOLD PLATING THICKNESS FOLLOW THE P/N)
PLATING SPECIFICATIONS OF THE SOLDER AREA FOLLOW THE P/N
2-2.FRONT SHELL:
PLATING SPECIFICATIONS FOLLOW THE P/N
2-3.MID PLATE&EMI PLATE:
CLEAR ONLY
3.MECHANICAL PERFORMANCE,
3-1.INSERTION FORCE: 0.5~2.0kgf.
3-2.REMOVAL FORCE: 0.8kgf~2.0kgf.
3-3.DURABILITY: 10000 CYCLES.
4.ELECTRICAL PERFORMANCE,
4-1. VOLTAGE RATING: 5 V DC/AC (RMS. max)
CURRENT RATING: 5 AMPS. FOR TOTAL VBUS/GND PINS;
1.25AMPS FOR CC PIN,0.25 AMPS. FOR ALL OTHER CONTACT.
4-2. LLCR:
VBUS & GND PINS AND OTHER PINS: 40mΩ/PIN MAX.
SHIELD: 50mΩ/MAX.
LLCR MAX. CHANGE OF ALL PINS: 10mΩ.
4-3.INSULATION RESISTANCE: 100MΩ MIN
4-4.DIELECTRIC WITHSTAND VOLTAGE,AC 100V FOR 1 MINUTE.
5. ENVIRONMENTAL PERFORMANCE:
OPERATING TEMPERATURE: -25℃~+85℃.
6.IR REFLOW:
THE PEAK TEMPERATURE ON THE BOARD SHALL
BE MAINTAINED FOR 10 SECONDS AT 260℃.

MARK	DESCRIPTION	DATE	REVISED	APPROVED
ΔX				
ΔX				
ΔX				

REVISIONS

UNSPECIFIED TOLERANCES	
ANGLAR	±5°
L≤ 4	±0.2
4<L≤ 16	±0.3
16<L≤ 63	±0.4
L> 63	±0.5

www.hiemi.cn

HIEMI TECHNOLOGY CO., LTD

DSND		SCALE: N/A	USB C F SPLINT CONN. PCB=1.0 (L=8.75)
DWN		VIEW:	PART NO.:
CHKD		UNIT: mm/in	DWG NO.:
APPD		SIZE: A4	

WEIGHT	SHEET	REVISION
	1/1	A0

RoHS

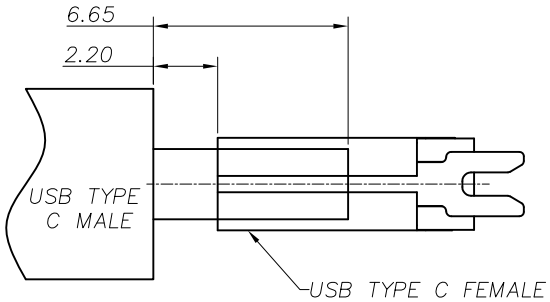

AFTER ASSEMBLY

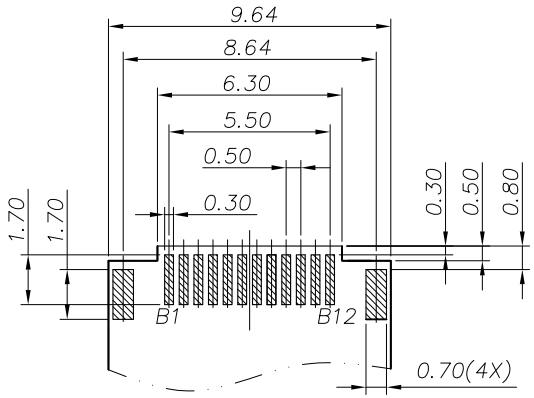

BOTTOM VIEW

USB TYPE-C PIN ASSIGNMENTS

PIN NUMBER	SIGNAL NAME
A1	GND
A2	SSTXp1
A3	SSTXn1
A4	VBUS
A5	CC1
A6	Dp1
A7	Dn1
A8	SBU1
A9	VBUS
A10	SSRXn2
A11	SSRXp2
A12	GND

PIN NUMBER	SIGNAL NAME
B12	GND
B11	SSRXp1
B10	SSRXn1
B9	VBUS
B8	SBU2
B7	Dn2
B6	Dp2
B5	CC2
B4	VBUS
B3	SSTXn2
B2	SSTXp2
B1	GND

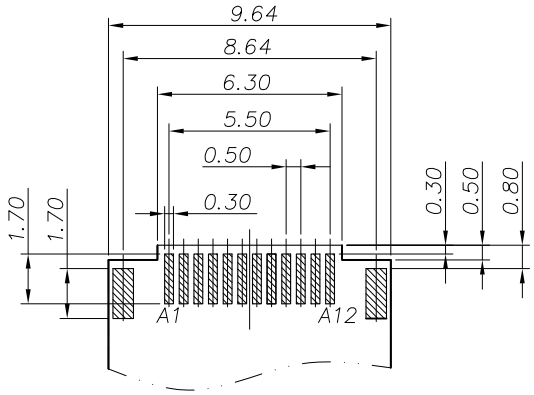

RECOMMENDED PCB LAYOUT(TOP VIEW)

THICKNESS 1.00±0.05MM; DEFAULT TOLERANCE: ±0.05

MARK	DESCRIPTION	DATE	REVISED	APPROVED
ΔX				
ΔX				
ΔX				

REVISIONS

ANGLAR	±5°
L≤ 4	±0.2
4<L≤ 16	±0.3
16<L≤ 63	±0.4
L> 63	±0.5

UNSPECIFIED TOLERANCES

www.hiemi.cn

HIEMI TECHNOLOGY CO., LTD

DSND		SCALE: N/A	USB C F SPLINT CONN. PCB=1.0 (L=8.75)
DWN		VIEW:	PART NO.:
CHKD		UNIT: mm/in	DWG NO.:
APPD		SIZE: A4	

WEIGHT	SHEET	REVISION
	1/1	A0

RoHS

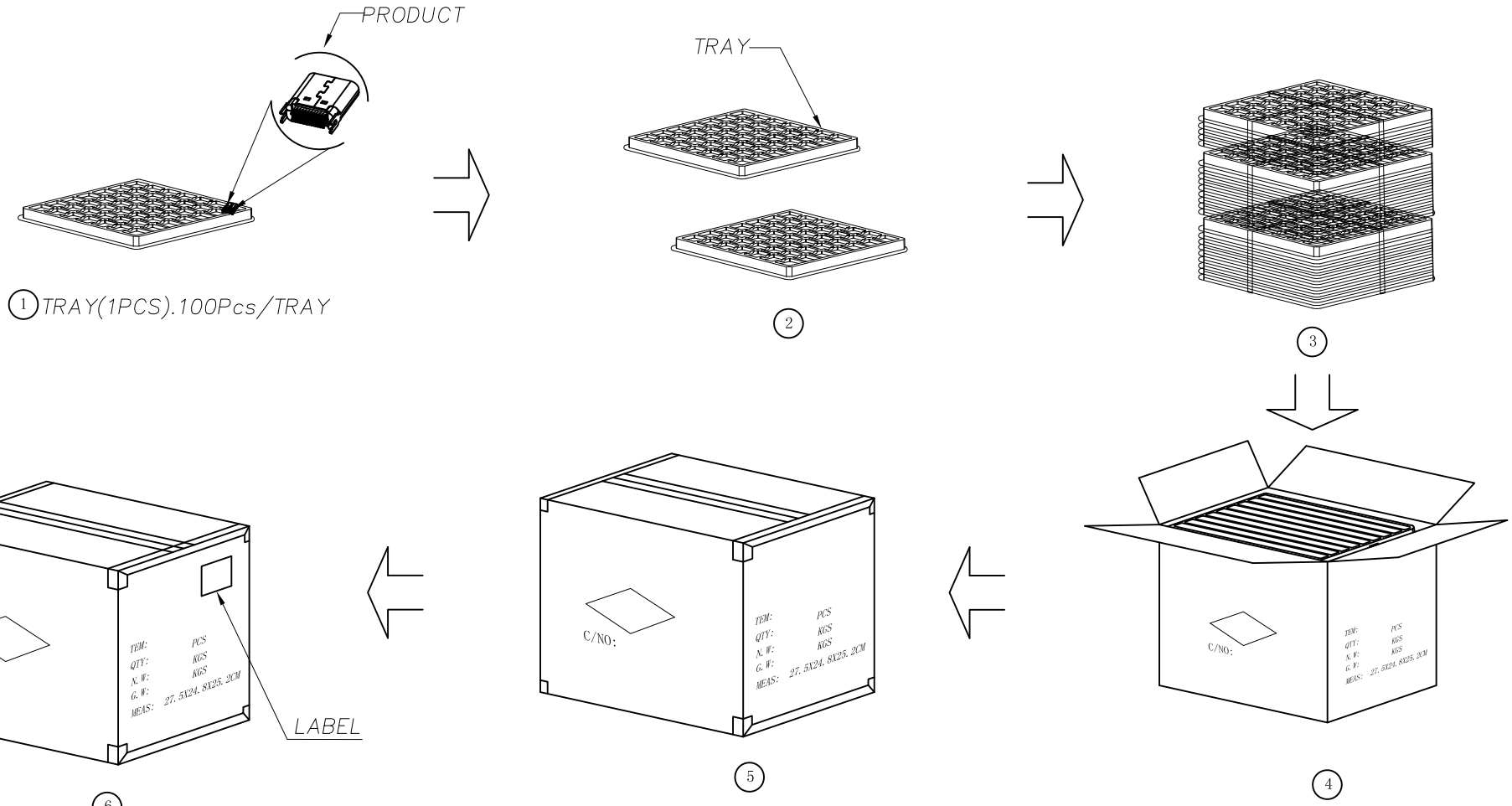

	REEL/TRAY	CARTON
CONNECTOR (PCS)	100	6000

MARK	DESCRIPTION	DATE	REVISED	APPROVED
ΔX				
ΔX				
ΔX				

REVISIONS

UNSPECIFIED TOLERANCES	
ANGLAR	±5°
L≤ 4	±0.2
4<L≤ 16	±0.3
16<L≤ 63	±0.4
L> 63	±0.5

www.hiemi.cn

DSND		SCALE: N/A	USB C F SPLINT CONN. PCB=1.0 (L=8.75)
DWN		VIEW:	PART NO.:
CHKD		UNIT: mm/in	DWG NO.:
APPD		SIZE: A4	

HIEMI TECHNOLOGY CO., LTD

WEIGHT	SHEET	REVISION
	1/1	A0