RoHS

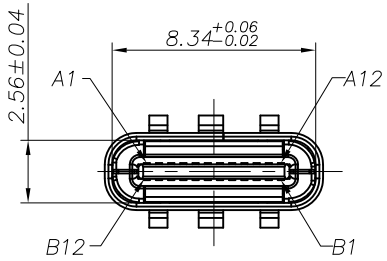

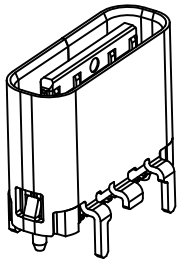

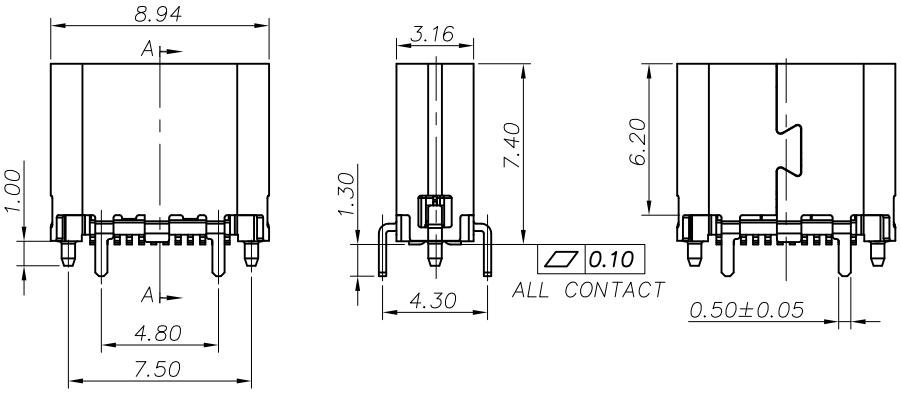

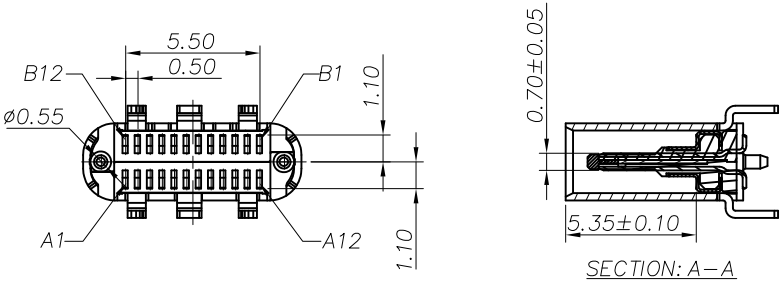

NOTE:

1.MATERIAL SPECIFICATION:
- 1.HOUSING: LCP,UL94 V-0.
- 2.TERMINAL: COPPER ALLOY
- 3.MID PLATE: STAINLESS STEEL
- 4.FRONT SHELL: STAINLESS STEEL
- 5.EMI PLATE: STAINLESS STEEL

2.PLATING SPECIFICATION:

2-1.TERMINAL:
Ni 50u" MIN. UNDER PLATED OVER ALL.
Au PLATED ON THE FUNCTIONAL AREA OF CONTACT.
(GOLD PLATING THICKNESS FOLLOW THE P/N)
PLATING SPECIFICATIONS OF THE SOLDER AREA FOLLOW THE P/N

2-2.FRONT SHELL:
PLATING SPECIFICATIONS FOLLOW THE P/N

2-3.MID PLATE&EMI PLATE:
CLEAR ONLY

3.MECHANICAL PERFORMANCE,
- 3-1.INSERTION FORCE: 0.5~2.0kgf.
- 3-2.REMOVAL FORCE: 0.8kgf~2.0kgf.
- 3-3.DURABILITY: 10000 CYCLES.

4.ELECTRICAL PERFORMANCE,

4-1. VOLTAGE RATING: 5 V DC/AC (RMS. max)
CURRENT RATING: 5 AMPS. FOR TOTAL VBUS/GND PINS;
1.25AMPS FOR CC PIN,0.25 AMPS. FOR ALL OTHER CONTACT.

4-2. LLCR:
VBUS & GND PINS AND OTHER PINS: 40mΩ/PIN MAX.
SHIELD: 50mΩ/MAX.
LLCR MAX. CHANGE OF ALL PINS: 10mΩ.

4-3.INSULATION RESISTANCE: 100MΩ MIN

4-4.DIELECTRIC WITHSTAND VOLTAGE,AC 100V FOR 1 MINUTE.

5. ENVIRONMENTAL PERFORMANCE:
OPERATING TEMPERATURE: -25℃~+85℃.

6.IR REFLOW:
THE PEAK TEMPERATURE ON THE BOARD SHALL BE MAINTAINED FOR 10 SECONDS AT 260℃.

MARK	DESCRIPTION	DATE	REVISED	APPROVED
ΔX				
ΔX				
ΔX				

REVISIONS

UNSPECIFIED TOLERANCES	
ANGLAR	±5°
L≤ 4	±0.2
4<L≤ 16	±0.3
16<L≤ 63	±0.4
L> 63	±0.5

www.hiemi.cn

DSND		SCALE: N/A	TYPE CF 24P VERTICAL (H=7.4) TAIL LENGTH=1.30MM
DWN		VIEW:	PART NO.: C14-13015220-004
CHKD		UNIT: mm/in	DWG NO.: C-C14-004
APPD		SIZE: A4	

HIEMI TECHNOLOGY CO., LTD

WEIGHT	SHEET	REVISION
	1/1	A0

RoHS

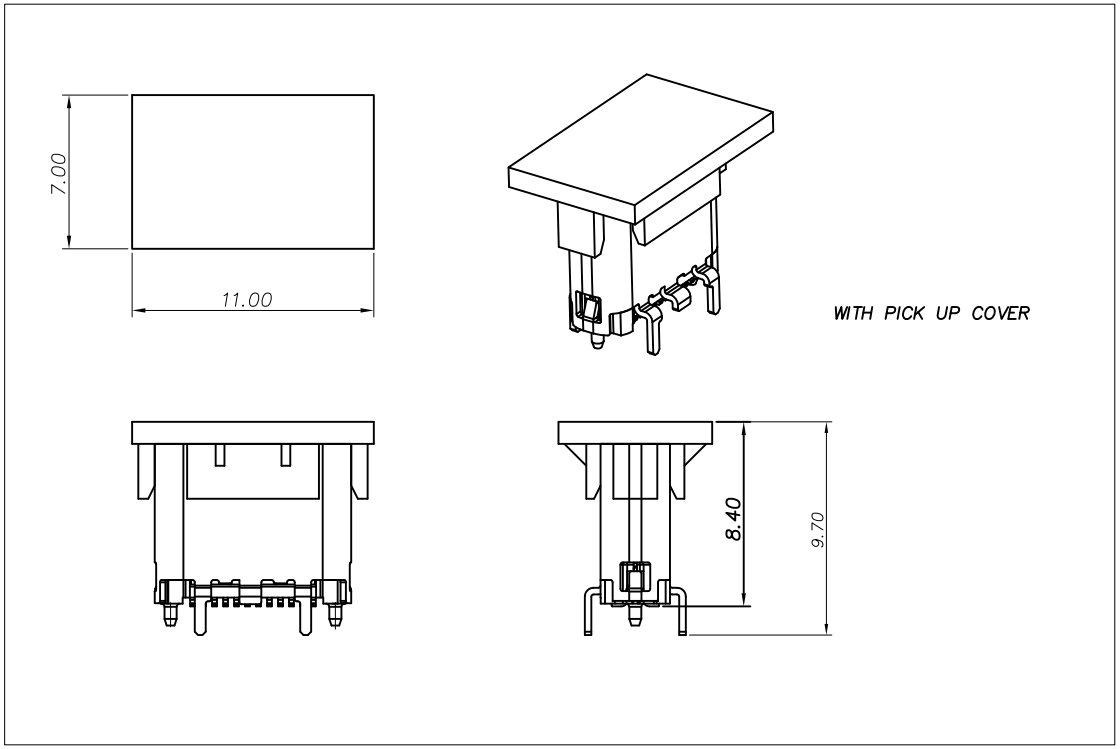

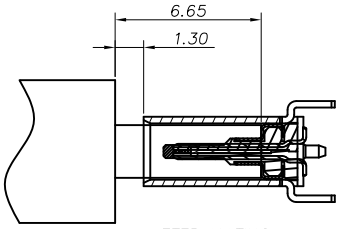

USB TYPE-C PIN ASSIGNMENTS

PIN NUMBER	SIGNAL NAME	PIN NUMBER	SIGNAL NAME
A1	GND	B12	GND
A2	SSTXp1	B11	SSRXp1
A3	SSTXn1	B10	SSRXn1
A4	VBUS	B9	VBUS
A5	CC1	B8	SBU2
A6	Dp1	B7	Dn2
A7	Dn1	B6	Dp2
A8	SBU1	B5	CC2
A9	VBUS	B4	VBUS
A10	SSRXn2	B3	SSTXn2
A11	SSRXp2	B2	SSTXp2
A12	GND	B1	GND

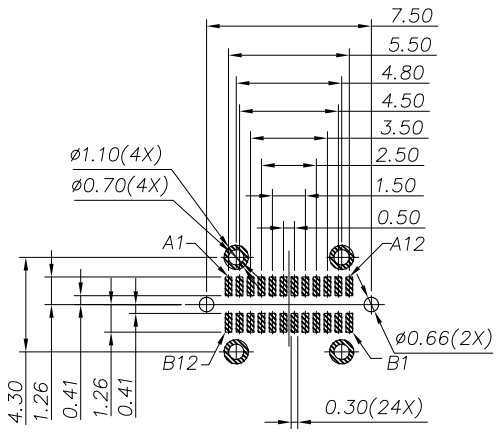

RECOMMENDED PCB LAYOUT(TOP VIEW)

DEFAULT TOLERANCE: ±0.05

					ANGLAR	±5°
ΔX					L≤ 4	±0.2
ΔX					4<L≤ 16	±0.3
ΔX					16<L≤ 63	±0.4
MARK	DESCRIPTION	DATE	REVISED	APPROVED	L> 63	±0.5
REVISIONS					UNSPECIFIED TOLERANCES	

www.hiemi.cn

DSND		SCALE: N/A	TYPE CF 24P VERTICAL (H=7.40) TAIL LENGTH=1.30MM
DWN		VIEW:	PART NO.: C14-13015220-004
CHKD		UNIT: mm/in	DWG NO.: C-C14-004
APPD		SIZE: A4	

HIEMI TECHNOLOGY CO., LTD

WEIGHT	SHEET	REVISION
	1/1	A0

RoHS

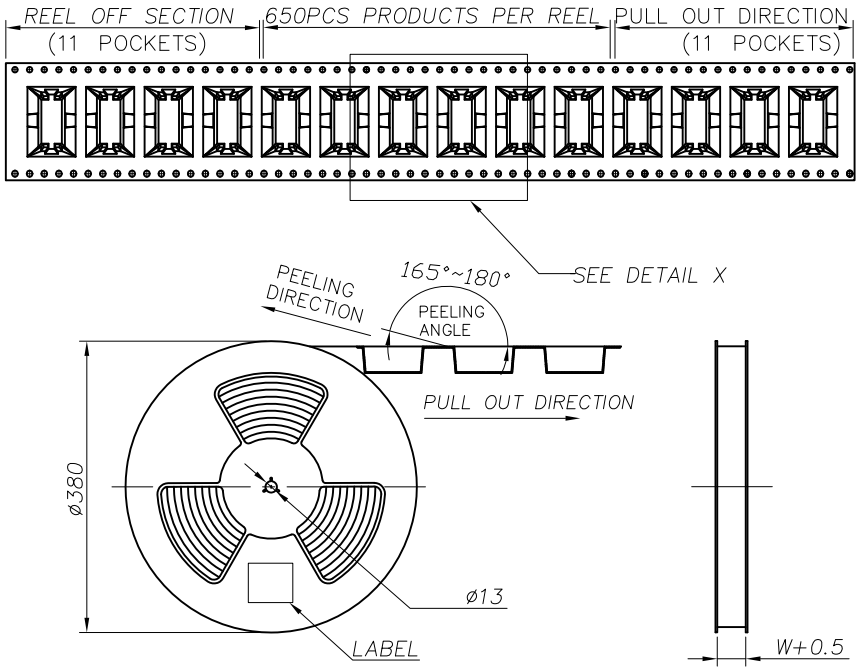

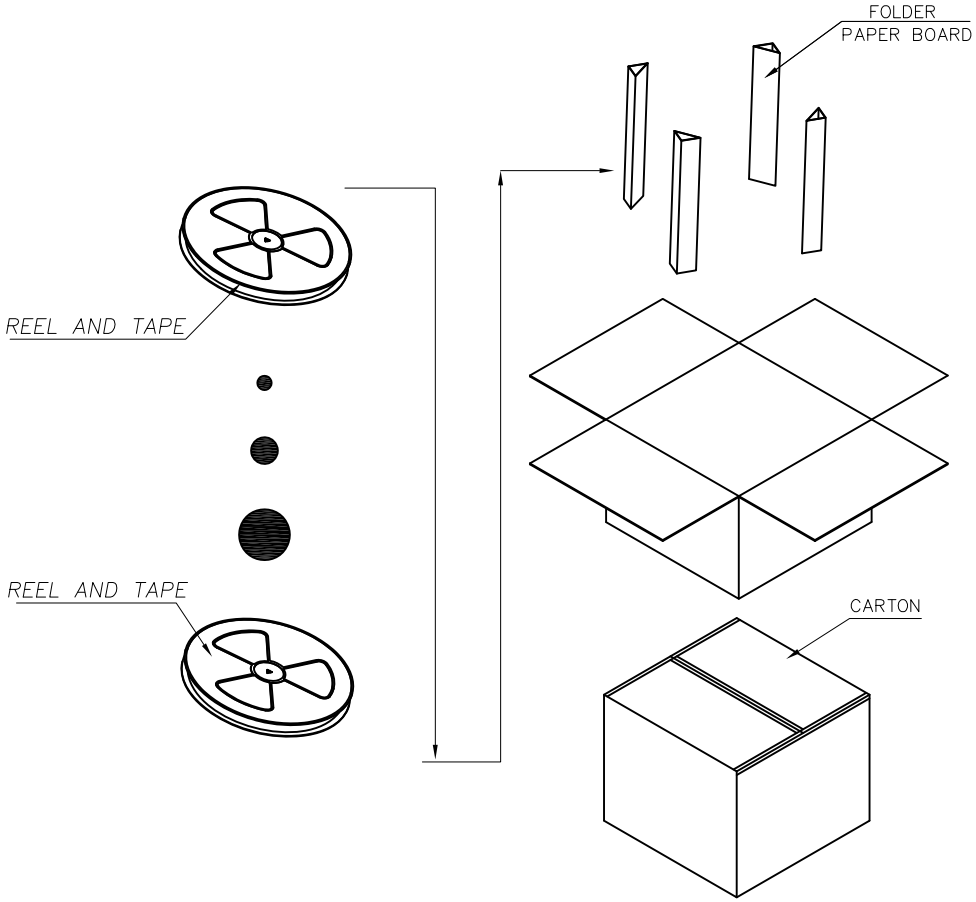

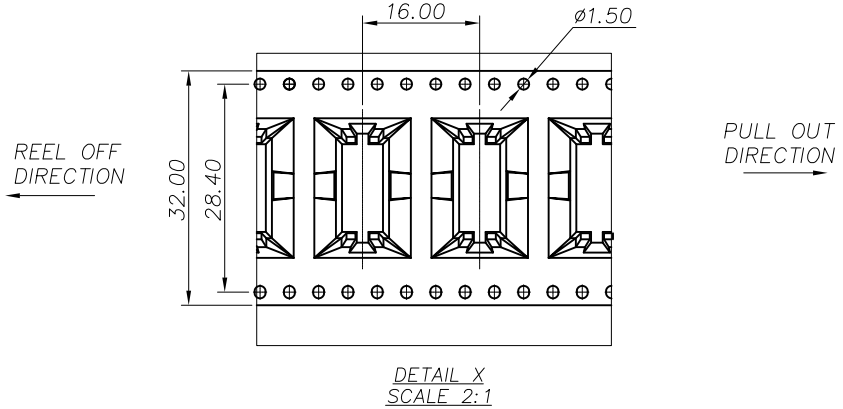

DETAIL X
SCALE 2:1

	REEL/TRAY	CARTON
CONNECTOR (PCS)	650	5200

MARK	DESCRIPTION	DATE	REVISED	APPROVED
ΔX				
ΔX				
ΔX				

REVISIONS

UNSPECIFIED TOLERANCES	
ANGLAR	±5°
L≤ 4	±0.2
4<L≤ 16	±0.3
16<L≤ 63	±0.4
L> 63	±0.5

www.hiemi.cn

HIEMI TECHNOLOGY CO., LTD

DSND		SCALE: N/A
DWN		VIEW:
CHKD		UNIT: mm/in
APPD		SIZE: A4

TYPE CF 24P VERTICAL (H=7.40)
TAIL LENGTH=1.30MM

PART NO.: C14-13015220-004

DWG NO.: C-C14-004

WEIGHT	SHEET	REVISION
	1/1	A0