RoHS

SPECIFICATIONS
Rated Current:3.0AMP
Contact Resistance:20mΩ Max
Withstand Voltage:1000V AC/DC
Insulation Resistance:1000MΩ Min
Operation Temperature:−40°c to +105°c

Contact Material:Brass
Contact Plating:Au Over Ni
Insulator Material:Polyester(UL94V−0)
Resistance To Soldering Heat:
245° C±5° C, 10s(PBT insulator)
260° C±5° C, 10s(PA6T&PA9T&LCP insulator)

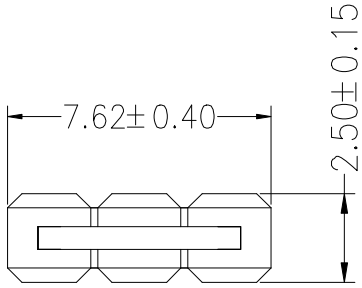

Recommended P.C.B Layout(Top Side)
(PCB BOARD TOLERANCE± 0.05)

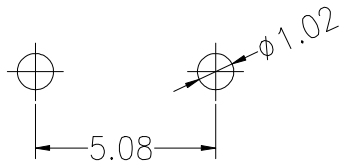

Ordering Information

1225 1 1 03 X N XX U XXX X XX

- Insulator Material: Option
  A=BK−PBT
  C=BK−PA6T
  E=BK−PA9T
  F=BK−LCP
- Contact Plating:
  G0:Gold Flash
  G1:1u" Gold
  G2:1.5u" Gold
  G3:2u" Gold
  G4:3u" Gold
  G5:5u" Gold
  G6:10u" Gold
  G7:15u" Gold
  G8:30u" Gold
  S0:Gold Flash/Tin
  SN:Tin
- Pin Length
- Packing: 0=PE Bag, A=Tray
- Series No.: 01~99

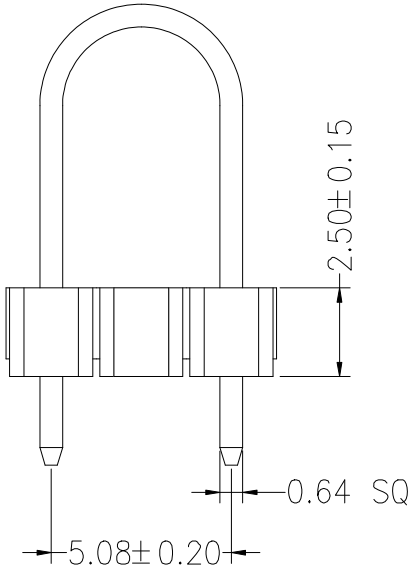

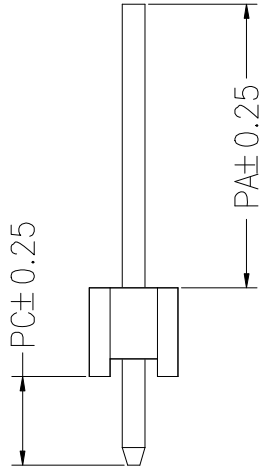

Dimension antitheses list		
ITEM	PA	PC
Alternate	XXX	XXX

MARK	DESCRIPTION	DATE	REVISED	APPROVED
ΔX				
ΔX				
ΔX				

REVISIONS

UNSPECIFIED TOLERANCES	
ANGLAR	±5°
L≤ 4	±0.2
4<L≤ 16	±0.3
16<L≤ 63	±0.4
L> 63	±0.5

www.hiemi.cn

DSND		SCALE: N/A
DWN		VIEW:
CHKD		UNIT: mm/in
APPD		SIZE: A4

HIEMI TECHNOLOGY CO., LTD

PART NO.: 12251103XNXXUXXXXXX

DWG NO.: 2.54mm Pin Header U型针

WEIGHT	SHEET	REVISION
	1/1	A0