RoHS

SPECIFICATIONS
Rated Current:2.0AMP
Contact Resistance:20mΩ Max
Withstand Voltage:500V AC/DC
Insulation Resistance:1000MΩ Min
Operation Temperature:−40°c to +105°c

Contact Material:Brass
Contact Plating:Au Over Ni
Insulator Material:Polyester(UL94V−0)
Resistance To Soldering Heat:
260° C±5° C, 10s(PA6T&PA9T&LCP insulator)

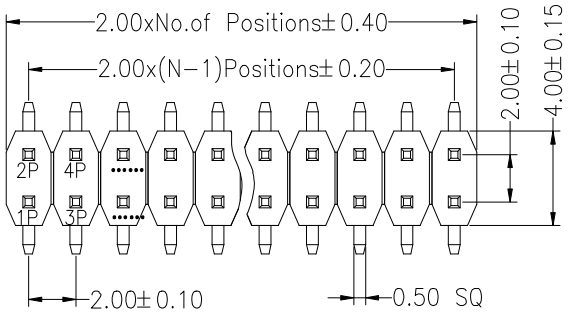

Recommended P.C.B Layout(Top Side)
(PCB BOARD TOLERANCE± 0.05)

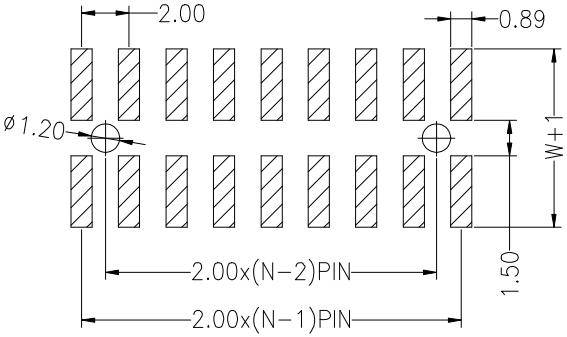

Ordering Information

13XX 1 2 XX X X XX M XXX X 0X

- 13XX — High.of Plastic: 10=H1.0mm, 15=H1.5mm, 20=H2.0mm, 25=H2.5mm, 30=H3.0mm
- 12 — Fixed
- XX — No.of Pins Per Row: 02~40P
- X — Insulator Material Option: C=BK−PA6T, E=BK−PA9T, F=BK−LCP
- X — Post: W=With Post, N=W/O Post
- XX — Contact Plating: G0:Gold Flash, G1:1u" Gold, G2:1.5u" Gold, G3:2u" Gold, G4:3u" Gold, G5:5u" Gold, G6:10u" Gold, G7:15u" Gold, G8:30u" Gold, S0:Gold Flash/Tin, SN:Tin
- M — Fixed
- XXX — Pin Length
- X — Packing: 0=PE Bag, A=Tray, T=Tube, P=Tube+Cap, R=Reel+Cap, M=Reel+Mylar
- 0X — Fixed

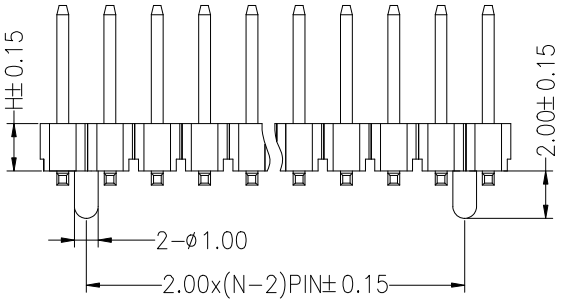

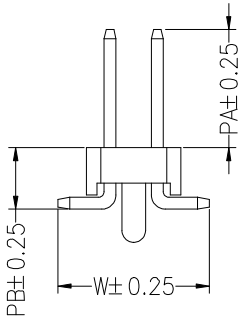

W=With Post

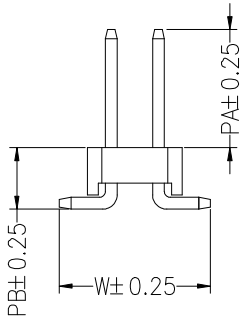

N=W/O Post

Dimension antitheses list			
ITEM	PA	PB	W
Alternate	XXX	XXX	XXX

MARK	DESCRIPTION	DATE	REVISED	APPROVED
ΔX				
ΔX				
ΔX				

REVISIONS

UNSPECIFIED TOLERANCES	
ANGLAR	±5°
L≤ 4	±0.2
4<L≤ 16	±0.3
16<L≤ 63	±0.4
L> 63	±0.5

www.hiemi.cn

HIEMI TECHNOLOGY CO., LTD

DSND		SCALE: N/A	
DWN		VIEW:	PART NO.: 13XX12XXXXXXMXXXX0X
CHKD		UNIT: mm/in	DWG NO.: 2.0mm Pin Header SMT
APPD		SIZE: A4	

WEIGHT	SHEET	REVISION
	1/1	A0