RoHS

SPECIFICATIONS
Rated Current:3.0AMP
Contact Resistance:20mΩ Max
Withstand Voltage:1000V AC/DC
Insulation Resistance:1000MΩ Min
Operation Temperature:−40°C to +105°C

Contact Material:Brass
Contact Plating:Au Or Sn Over Ni
Insulator Material:Polyester(UL94V−0)
Standard: PA6T
Max.Processing Temp: 230°C for 30−60 seconds
(260°C for 10 seconds)

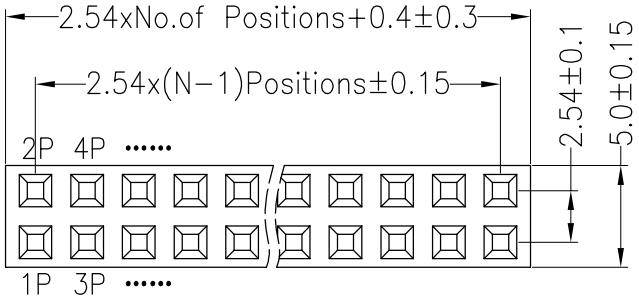

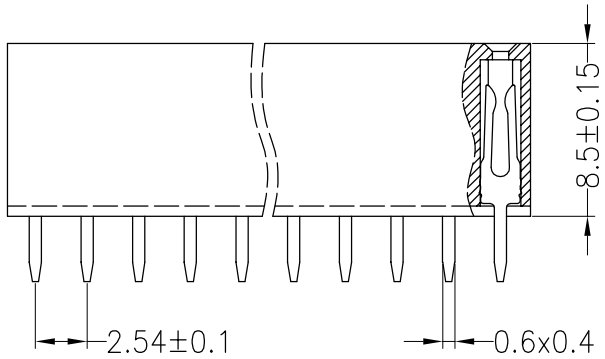

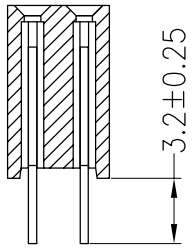

Ordering Information

2285 02 XX X N XX S Y X 0X

- XX — No.of Pins Per Row: 2~40
- X — Insulator Material Option: A=BK−PBT, C=BK−PA6T, D=BK−PA46, E=BK−PA9T, F=BK−LCP
- XX — Contact Plating: G1:Gold Flash, G3:2U" Gold, G4:3U" Gold, G5:5U" Gold, G6:10U" Gold, G7:15U" Gold, S0:Gold Flash/Tin, SN:Tin
- X — Packing: 0=PE Bag, A=Tray, T=Tube

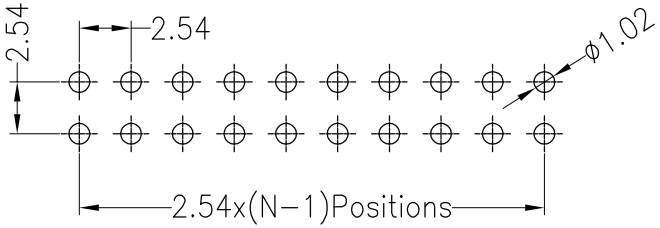

Recommended P.C.B Layout(Top Side)
(PCB BOARD TOLERANCE±0.05)

MARK	DESCRIPTION	DATE	REVISED	APPROVED
ΔX				
ΔX				
ΔX				

REVISIONS

UNSPECIFIED TOLERANCES	
ANGLAR	±5°
L≤ 4	±0.2
4<L≤ 16	±0.3
16<L≤ 63	±0.4
L> 63	±0.5

www.hiemi.cn

HIEMI TECHNOLOGY CO., LTD

DSND		SCALE: N/A	
DWN		VIEW:	PART NO.: 228502XXXNXXSYX0X
CHKD		UNIT: mm/in	DWG NO.: .54PF H8.5mm 2xNpin 180° W5.0mm
APPD		SIZE: A4	

WEIGHT	SHEET	REVISION
	1/1	A0