1.00mm(0.039″) Femal Header, Angle Row, SMT Type H=2.0mm（U）

SPECIFICATONS:
Insulator Material: High Temperature Thermoplastic
(UL94V-0),Standard:6T/PA46+30%Glass Fiber
Contact Material: Phosphor Brass
Contact Plating: Gold/Tin over Nickel
Current Rating: 0.75A
Withstanding Voltage: 500V AC/minute
Operation Temperature: -40℃ to +105℃
Insulation Resistance: 500MΩ Min at DC 500V
Contact Resistance: 30mΩ Max at DC 0.75A

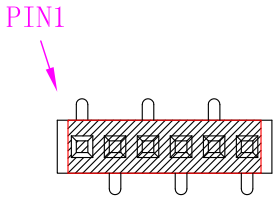

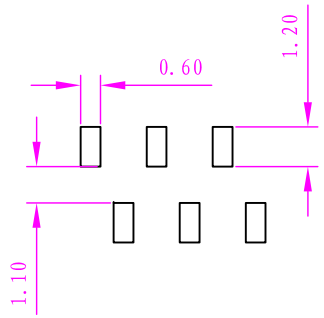

PIN1 UP

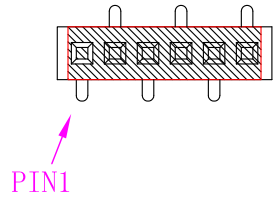

PIN1 DOWN

Recommand PCB Layout

Ordering Information

FH1.00×H-1×nT-G**-P**

Packing:1=Bag 2=Tray 3=Box 4=Tube
5=Reel
Contact Plating:

0	Gold falsh	5	5U″Gold
1	1U″Gold	10	10U″Gold
2	2U″Gold	15	15U″Gold
3	3U″Gold	30	30U″Gold

Total Rows:N=1~50
T:SMT

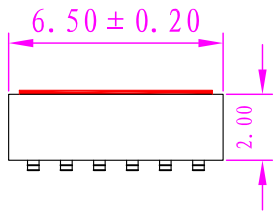

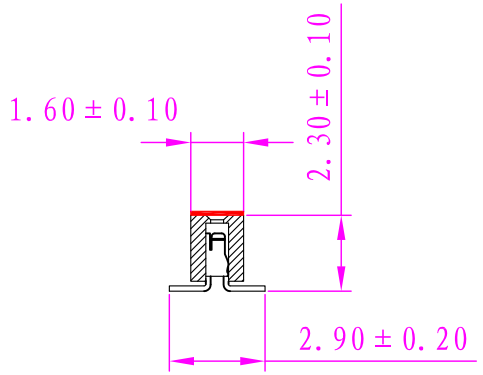

骇米科技电子（SZ）有限公司 HIEMI Technology Electronice(SZ) Co., Ltd				TOLERANCE UNLESS OTHERWISE SPECIFIED	DWG NO.:		SCALE: FIT
					UNIT:	mm	SHEET: 1/1
				.XXX ± 0.10	CHECKED BY:	白文星	DRAWN BY: MIKEL
PRODUCT NAME:	FEAMEL HEADER	VER:	02	.XX ± 0.20 .X ± 0.30	DATE:	2015.1.23	
SPECIFICATION:	1.0*2.0-1*nT 立贴			.X° ± 0.3°	ECN:		