HSF Pb RoHS

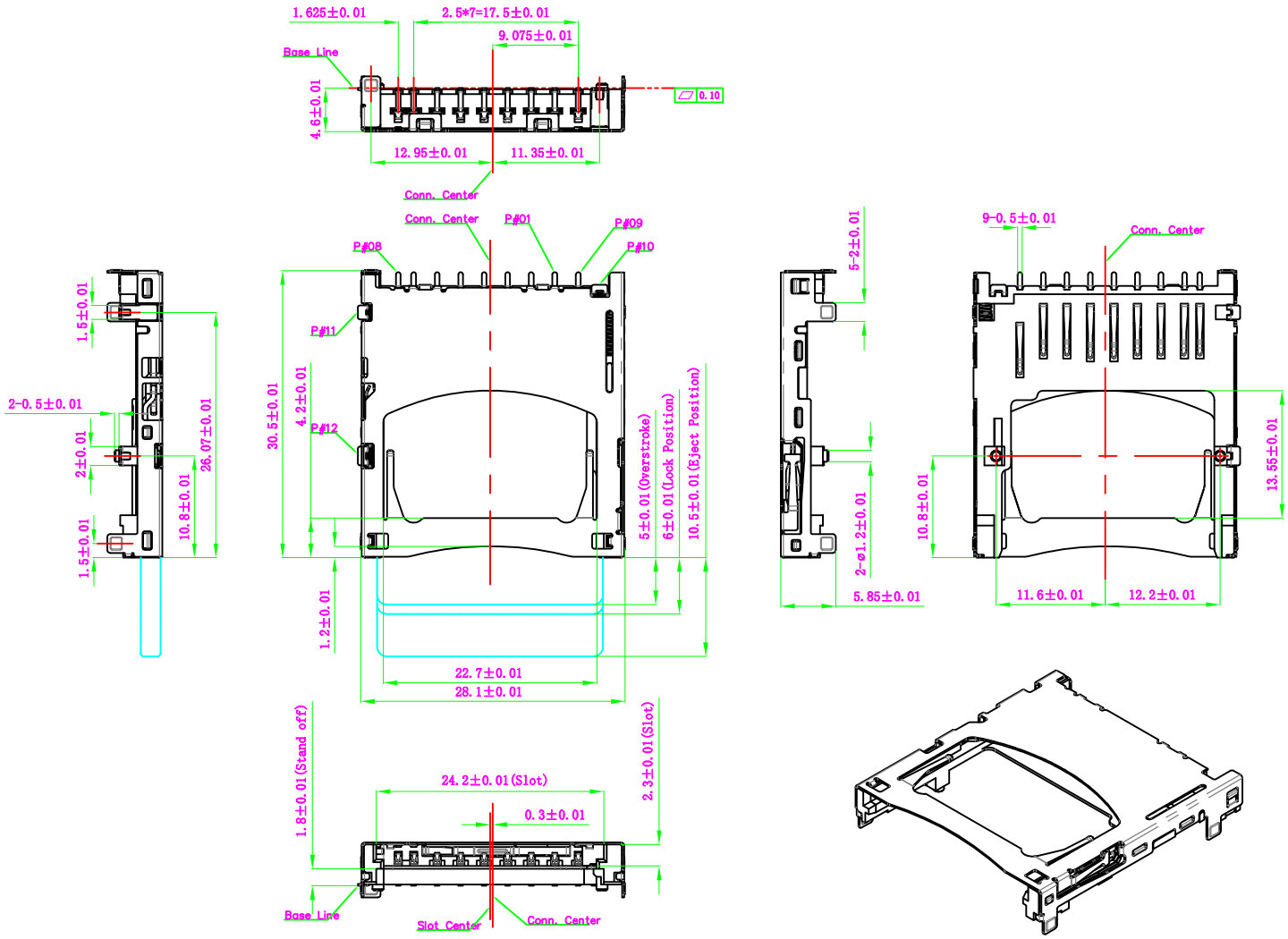

NOTE:

1. Material:
   1-1 Housing: Heat Resistance Polym, Black, UL94V-0
   1-2 Contact: Copper Alloy
   1-3 Cover: Stainless Stell
2. Plating:
   2-1 Contact terminal:
   Contact area: Gold 30u"
   Solder area: Matte Tin 80u" Min
   Underplating: Ni overall 50U" Min.
   2-2 Cover:
   Underplating: Solder Ni overall 50U"
3. Specification:
   3-1. Current Rating :0.5A max.
   3-2. Contact Resistance: 50 mOhms max
   3-3. Insulation Resistance: 1000 MOhms min./ 500VDC
   3-4. Dielectric Withstanding Voltage:500V AC/1minute
   3-5. Operating Temperature:-25*C to+ 85'C
4. Product Compliant to HalogenFree+ RoHS2 Directive 2002/95/EC and ELV 2000/53/EC
5. Recommending A Metal More Than 0.15mm Thick. Please Confirm Solderadility, If Use A Metal Mask Less Than 0.15mm Thick.

PART NUMBER:
ATK-SSIM460A003

- SERIES NUMBER
  - Packing
    A:Tray
    T:Tube
    R:Tape&Reel
  - 460=4.60mm HEIGHT
- ATK- COMPANY NAME

Unless Otherwise specified tolerance	
X. ±0.35	X.XX:±0.20
X.X:±0.25	X.XXX:±0.15

SCALE: As Shown	UNIT: mm
DRAW Yin Han	DATE 09/07/2025
CHECK BobYang	DATE 09/07/2025

3rd ANGLE PROJECTION

骇米科技电子（深圳）有限公司
HIEMI Technology(SHENZHEN) Co., Ltd

TITLE:
SD MEMORY CARD PUSH PUSH SMT(TOP MOUNT TYPE 1.8MM STAND OFF)

DRAWING NO:ATK-SSIM460A003

PRODUCT NO: ATK-SSIM460A003

REV	DESCRIPTION	DATE

HSF Pb RoHS

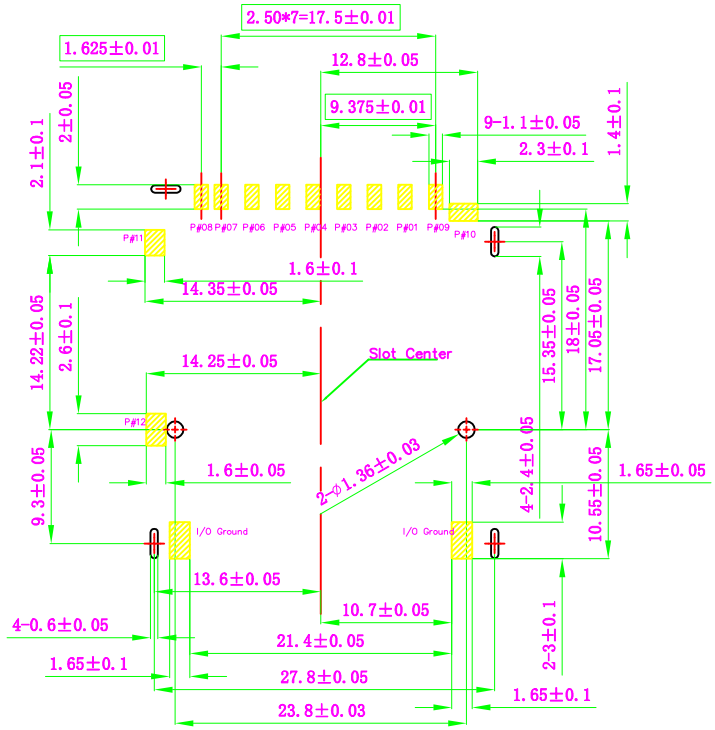

Recommended PCB Layout

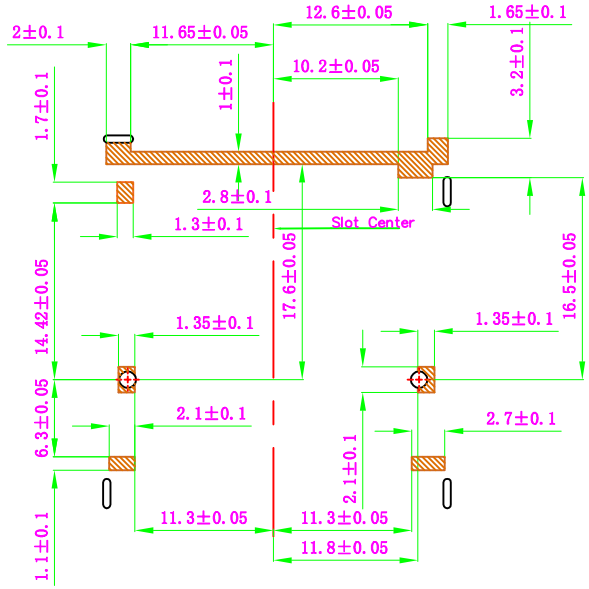

Stand off Area for Pattern Prohibition

PIN No.	FUNCTION
P#01	CD/DAT3
P#02	CMD
P#03	VSS1
P#04	VDD
P#05	CLK
P#06	VSS2
P#07	DAT0
P#08	DAT1
P#09	DAT2
P#10	Card Detect Switch
P#11	Common Ground
P#12	Write Protect Switch

Card Uninsertion	P#10 Open P#11 P#12 Open P#11
Card Write Protect Insertion	P#10 Short P#11 P#12 Open P#11
Card Normal Insertion	P#10 Short P#11 P#12 Short P#11

REV	DESCRIPTION	DATE

Unless Otherwise specified tolerance
X. ±0.35 X.XX: ±0.20
X.X: ±0.25 X.XXX: ±0.15

SCALE: As Shown	UNIT: mm
DRAW Yin Han	DATE 09/07/2025
CHECK BobYang	DATE 09/07/2025

3rd ANGLE PROJECTION

骇米科技电子（深圳）有限公司
HIEMI Technology(SHENZHEN) Co., Ltd

TITLE:
SD MEMORY CARD PUSH PUSH SMT(TOP MOUNT TYPE 1.8MM STAND OFF)

DRAWING NO:ATK-SSIM460A003

PRODUCT NO: ATK-SSIM460A003